APPENDIX A
Detailed Project Maps and Fence Designs

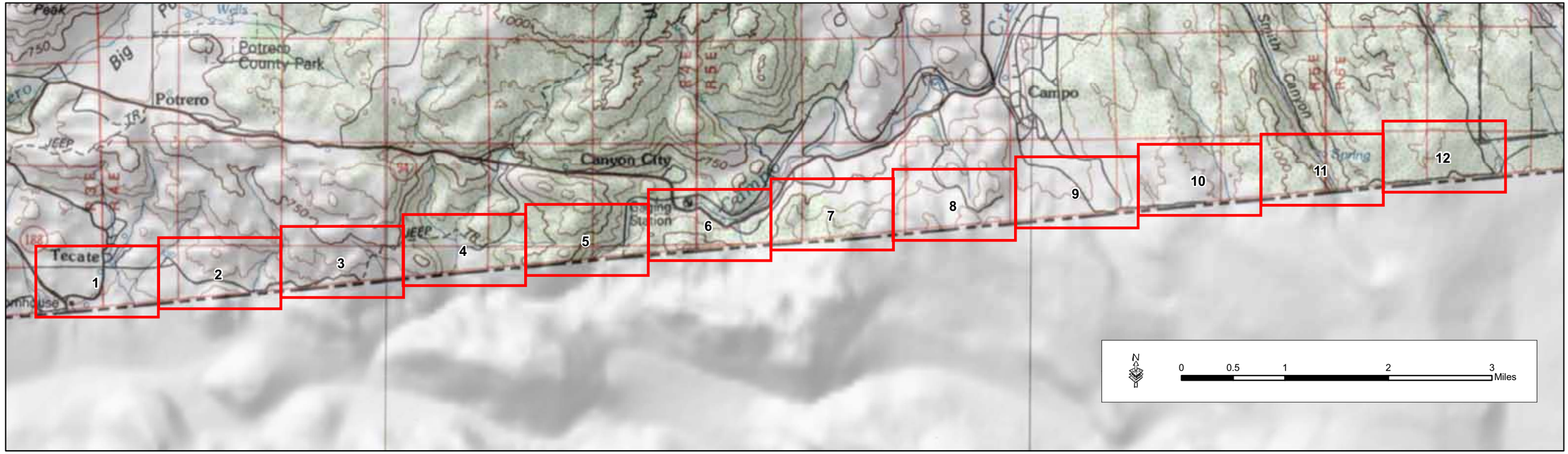

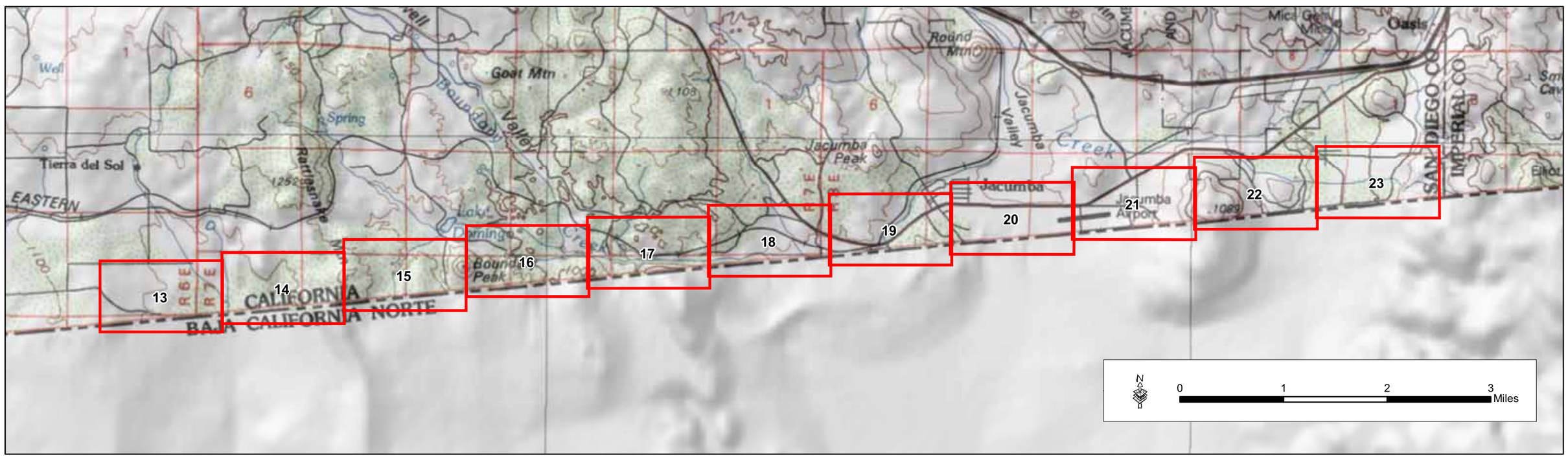

Figure 2-1: Index Map

GSRC

November 2007

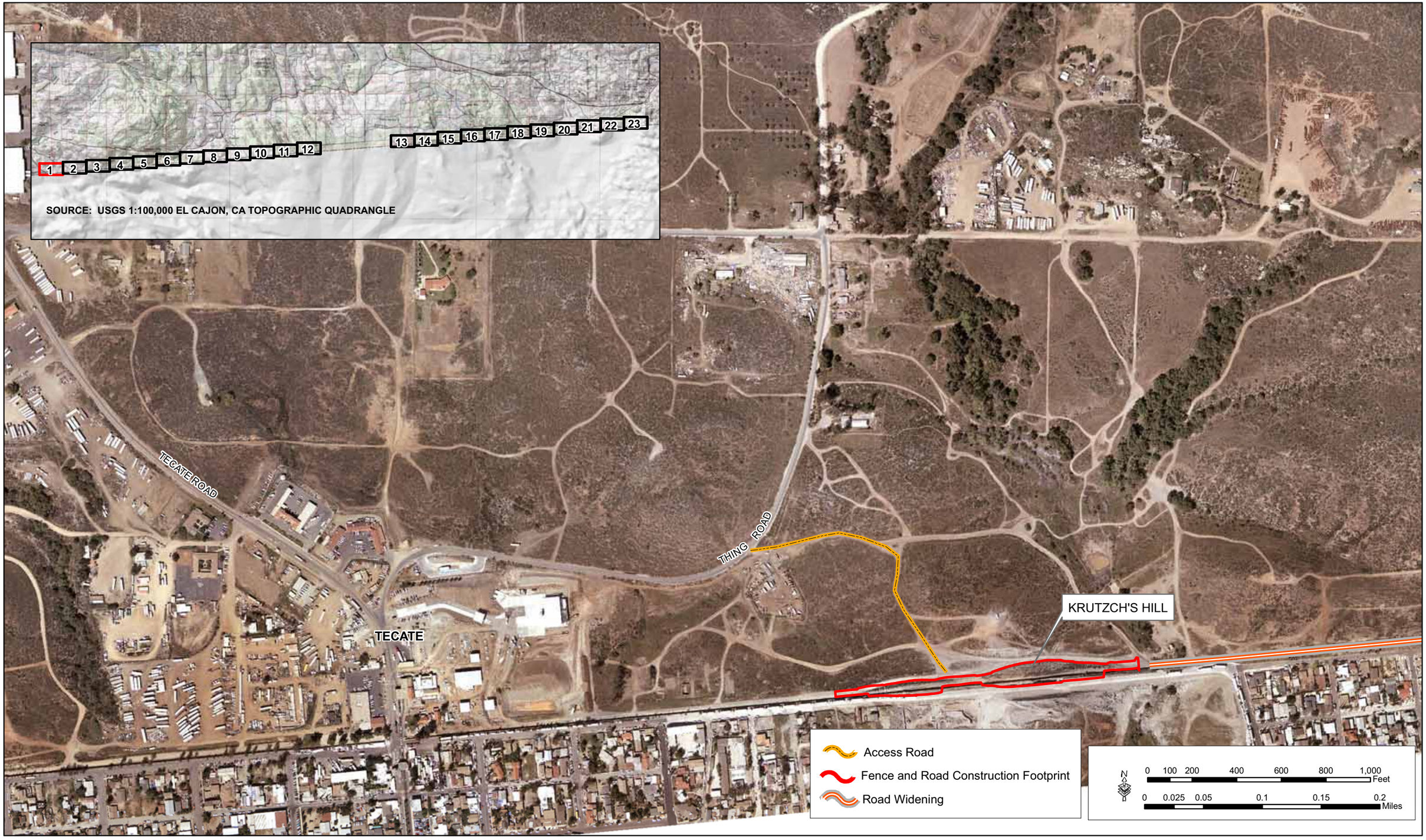

Map 1 - Krutzch's Hill, Road Widening, and Access Road

GSRC

November 2007

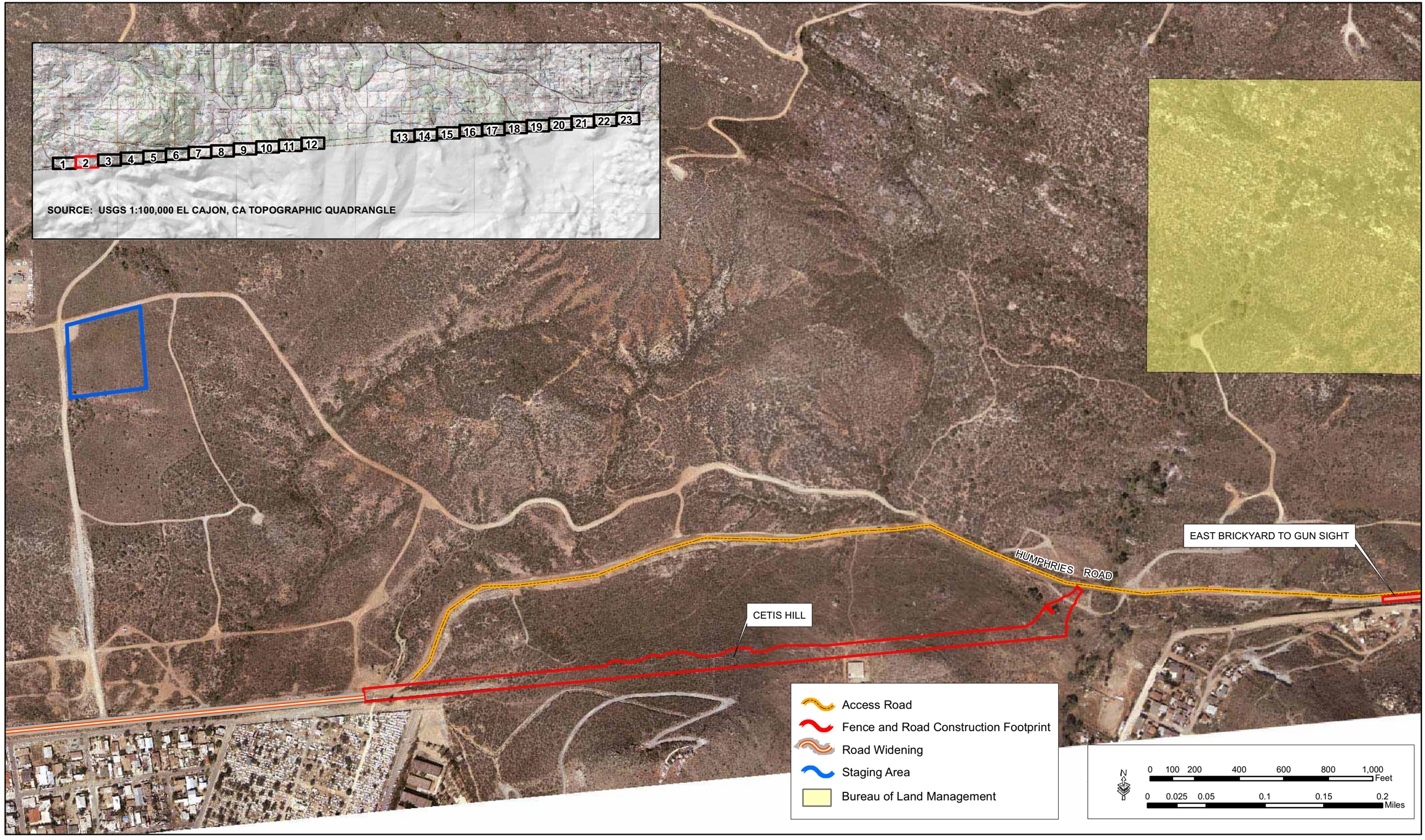

Map 2 - Cetis Hill, Road Widening, Staging Area, and Access Road

GSRC

November 2007

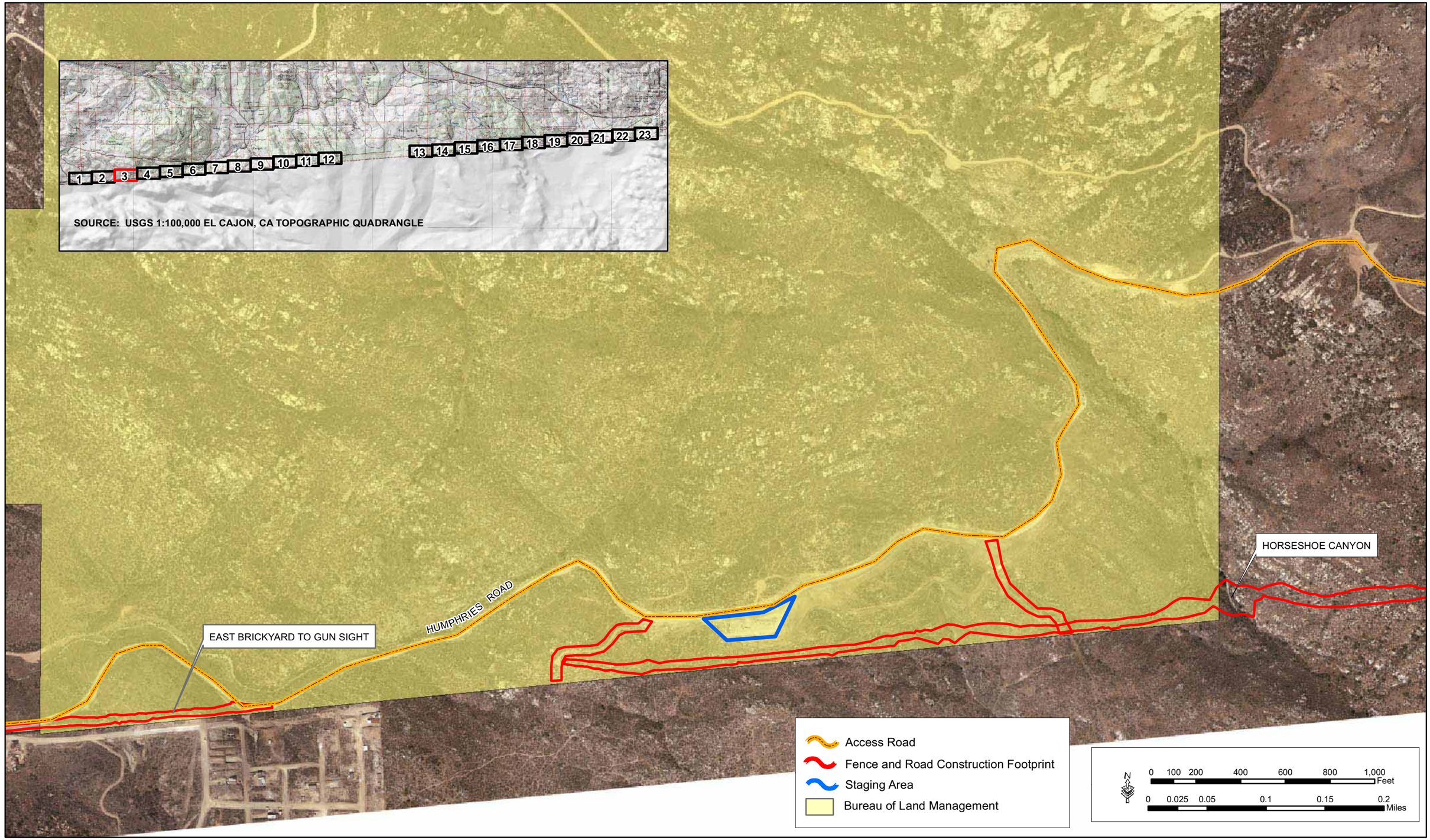

Map 3 - East Brickyard to Gun Sight, Horseshoe Canyon, Staging Area and Access Road

GSRC

November 2007

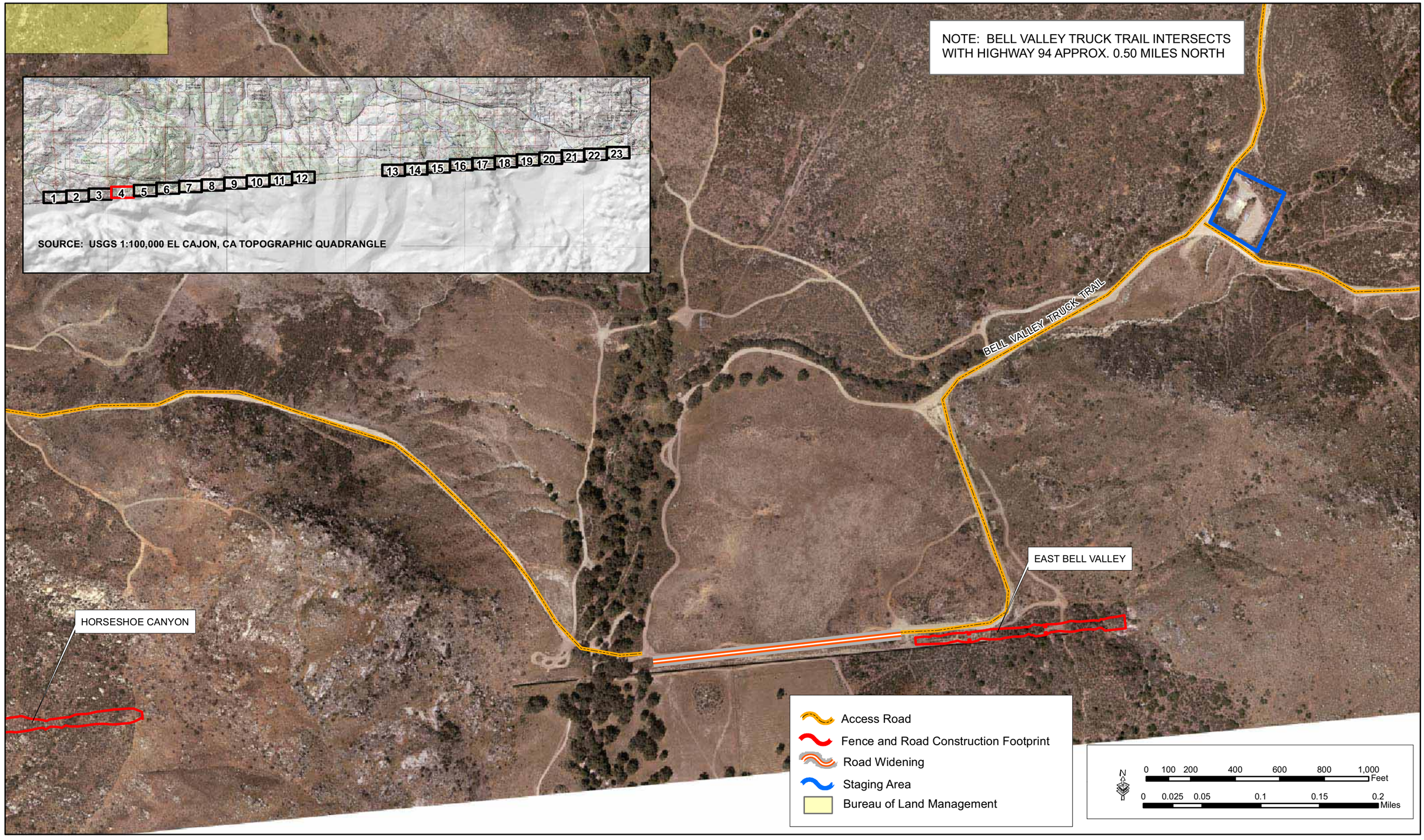

Map 4 - Horseshoe Canyon, East Bell Valley, Road Widening, Staging Area, and Access Roads

GSRC

November 2007

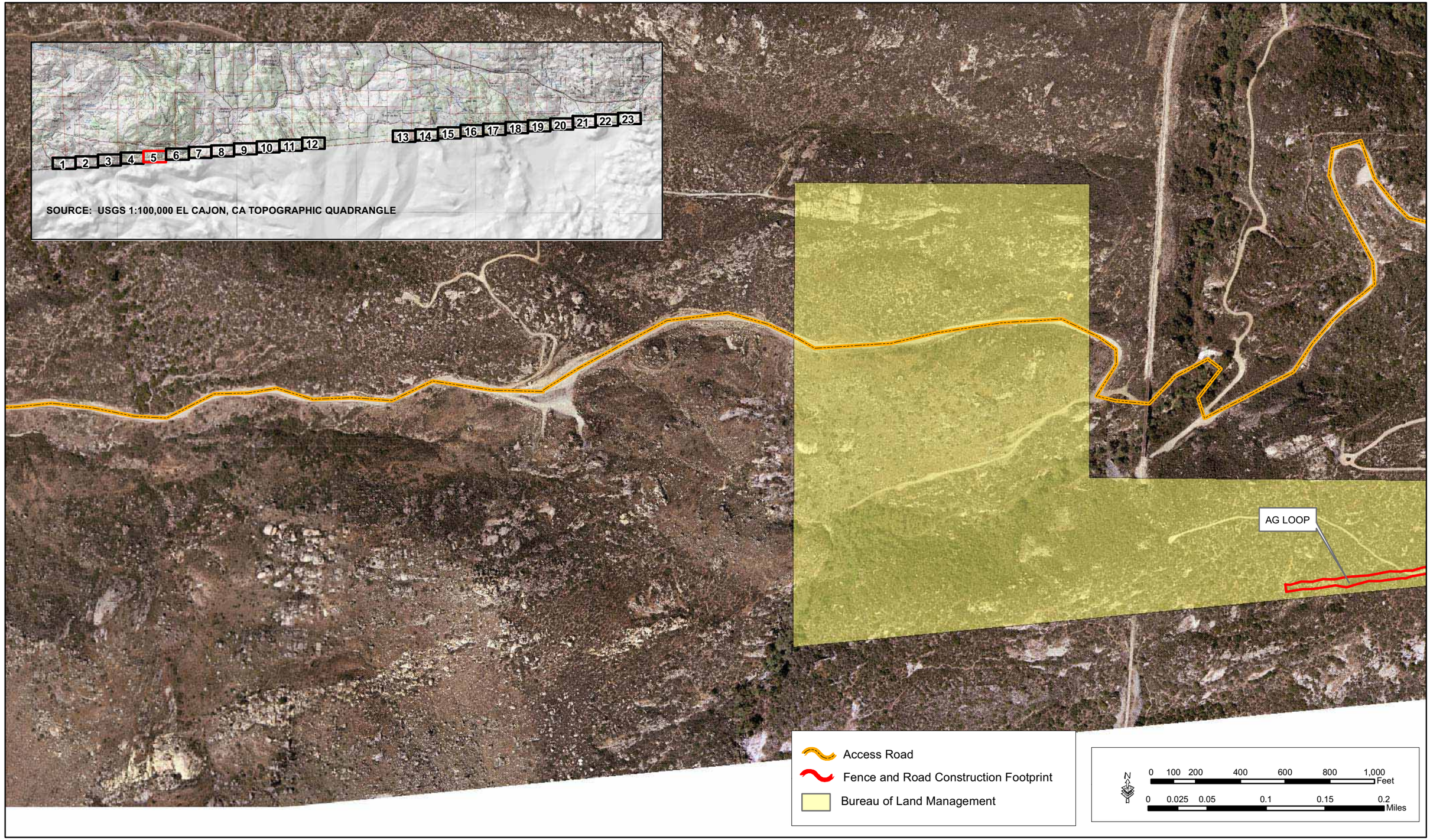

Map 5 - Ag Loop and Access Road

GSRC

November 2007

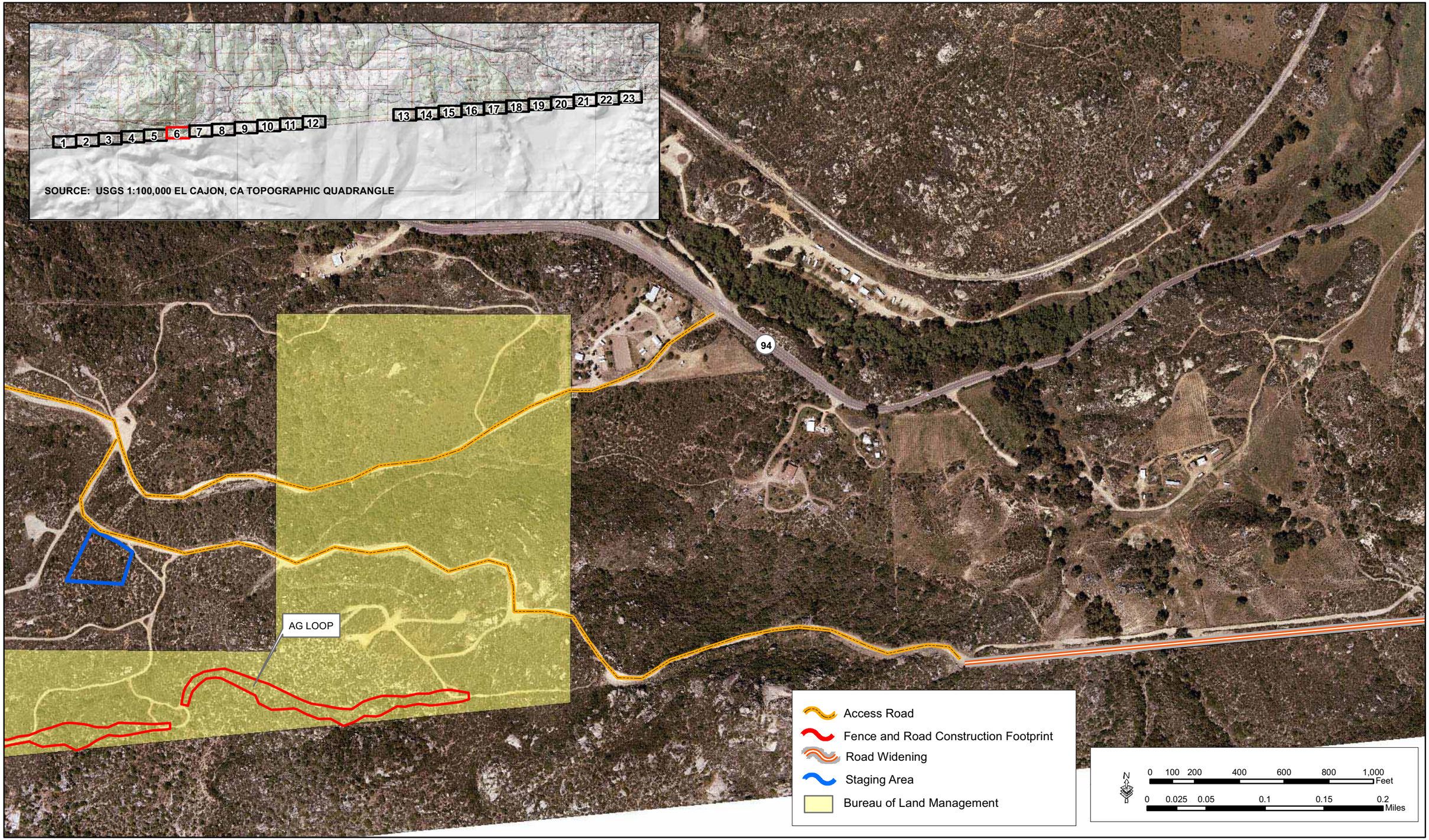

Map 6 - Ag Loop, Road Widening, Staging Area, and Access Road

GSRC

November 2007

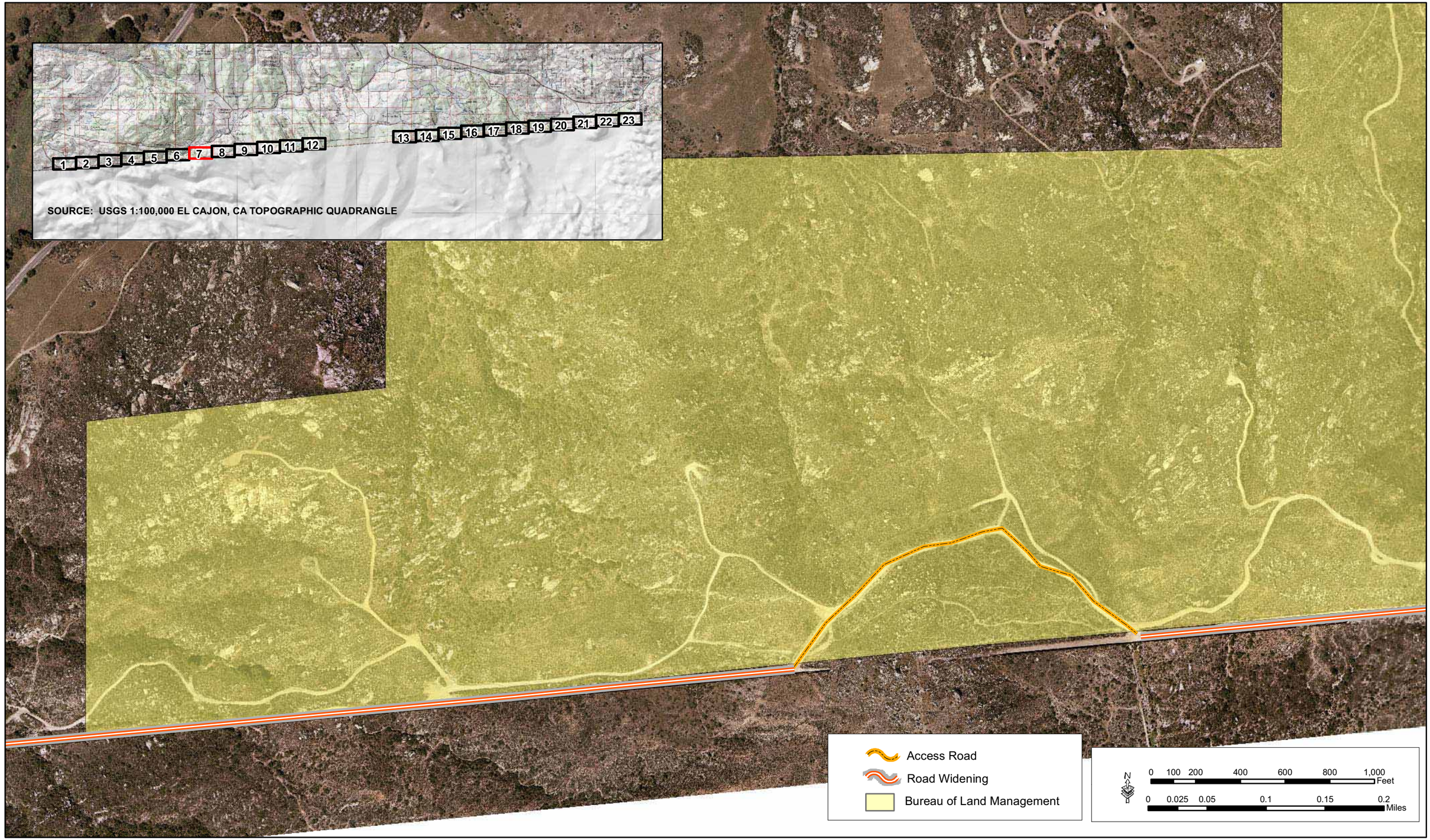

Map 7 - Road Widening and Access Road

GSRC

November 2007

Map 8 - Road Widening

GSRC

November 2007

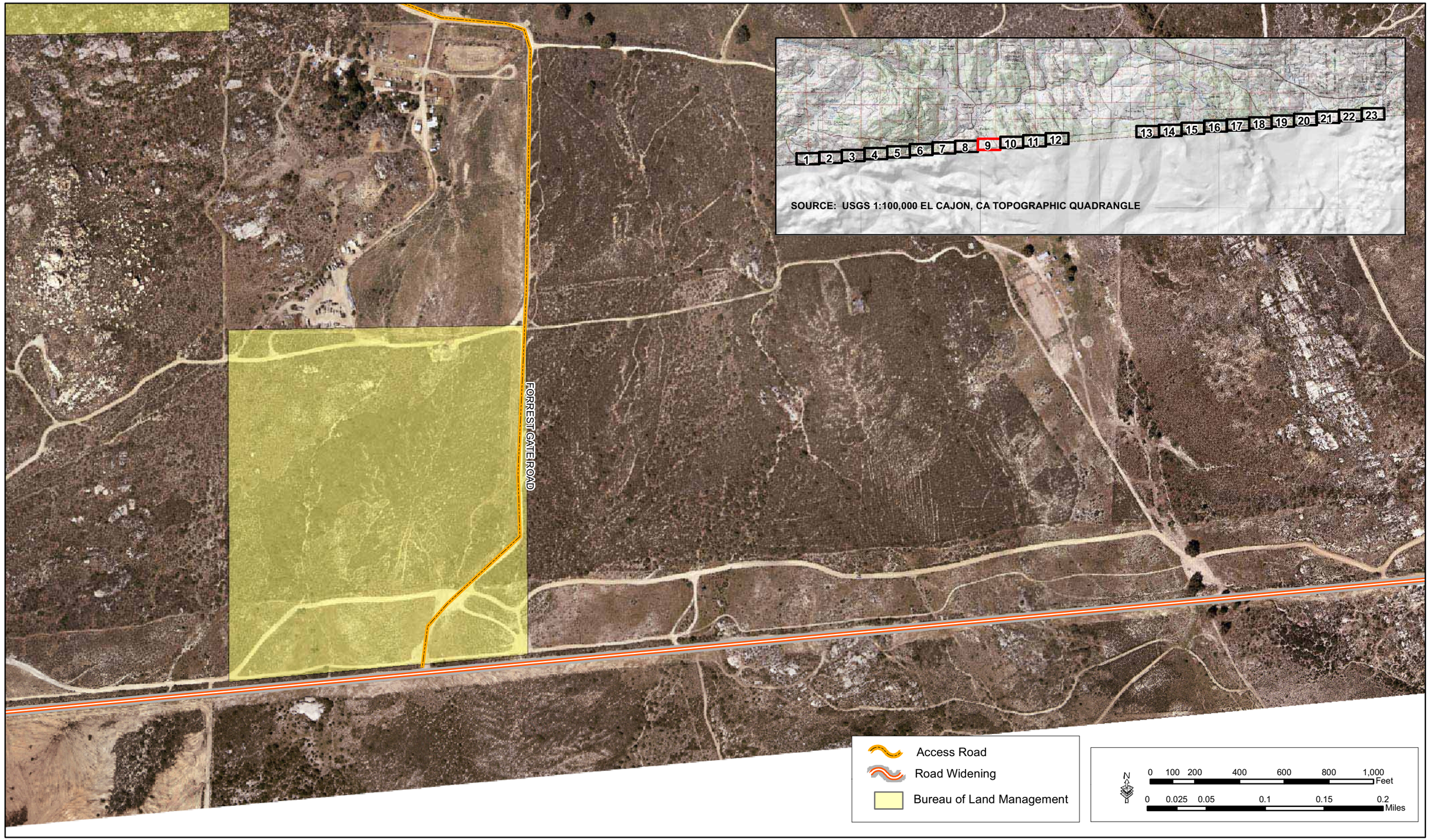

Map 9 - Road Widening and Access Road

GSRC

November 2007

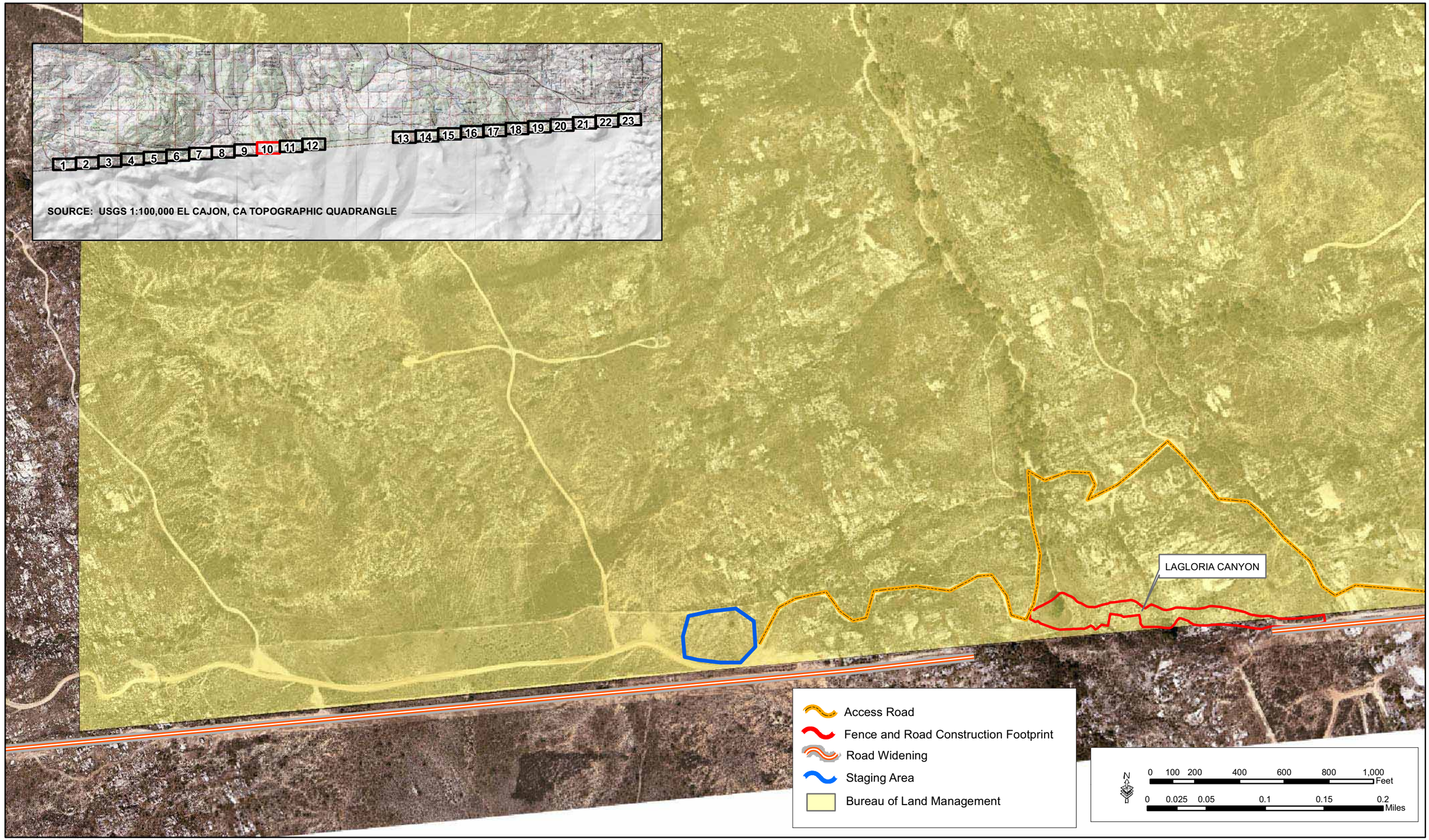

Map 10 - LaGloria Canyon, Road Widening, Staging Area, and Access Road

GSRC

November 2007

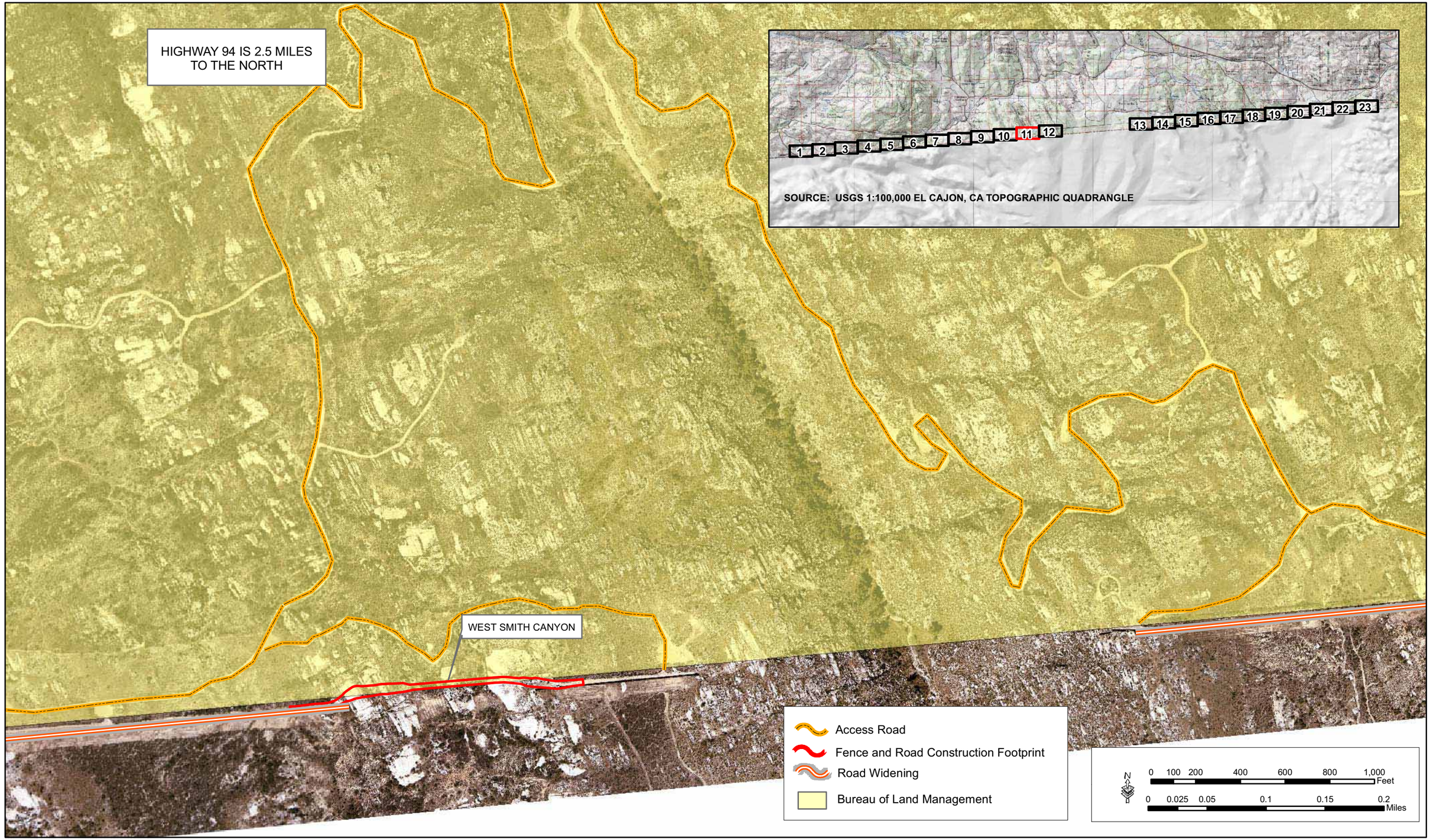

Map 11 - West Smith Canyon, Road Widening, Staging Area, and Access Roads

GSRC

November 2007

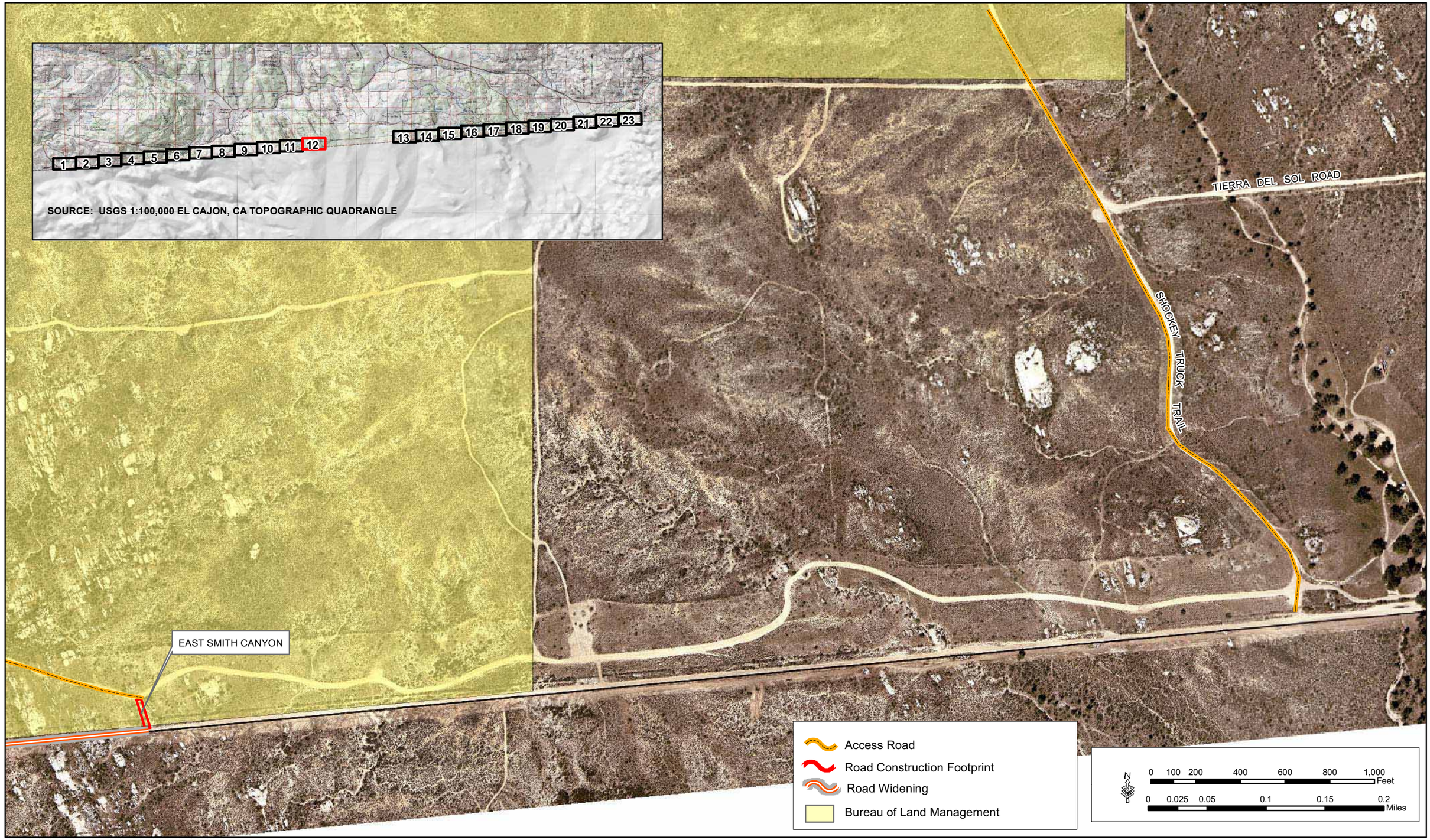

Map 12 - East Smith Canyon, Road Widening, and Access Road

GSRC

November 2007

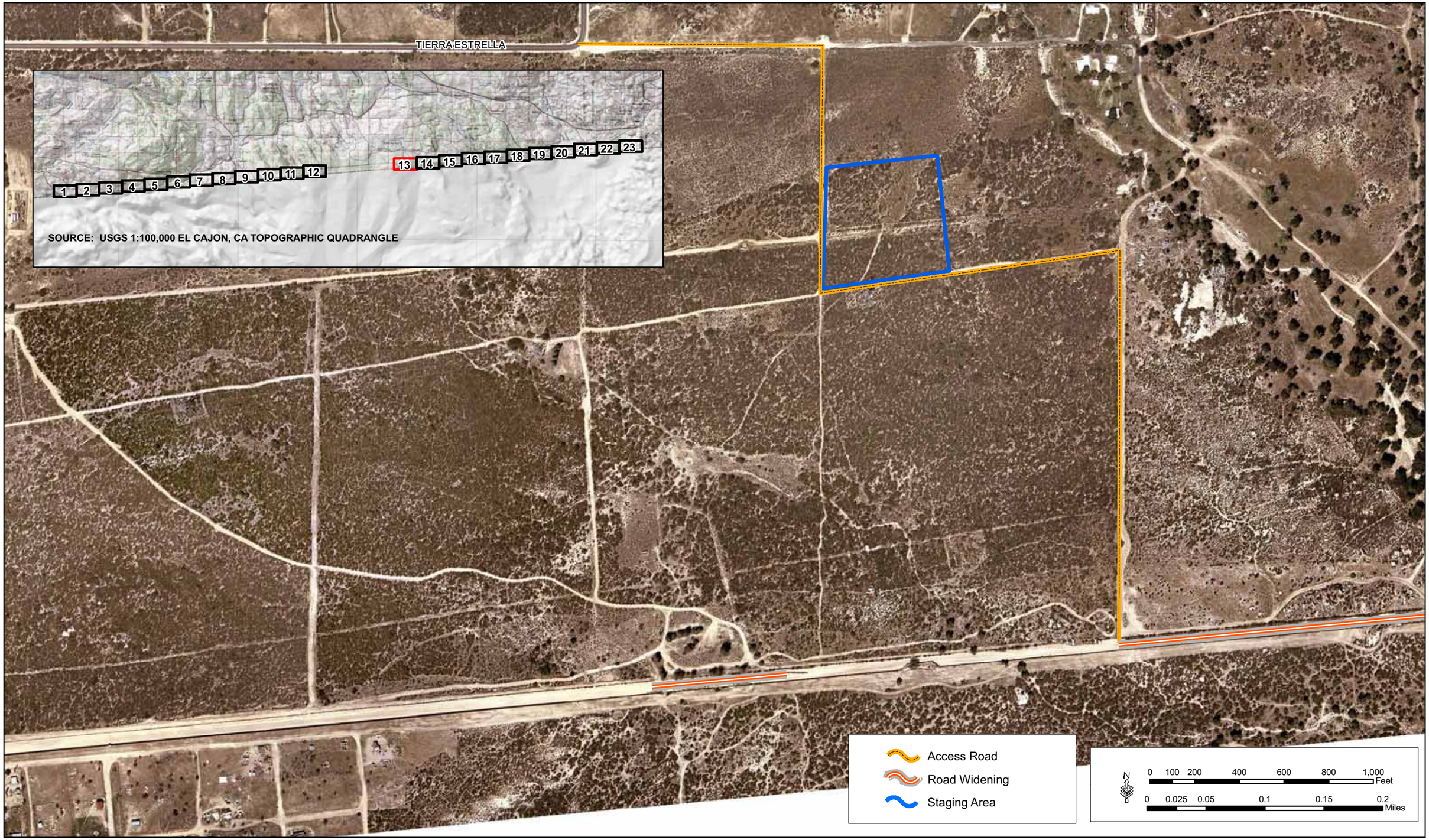

Map 13 - Road Widening, Staging Area, and Access Road

GSRC

November 2007

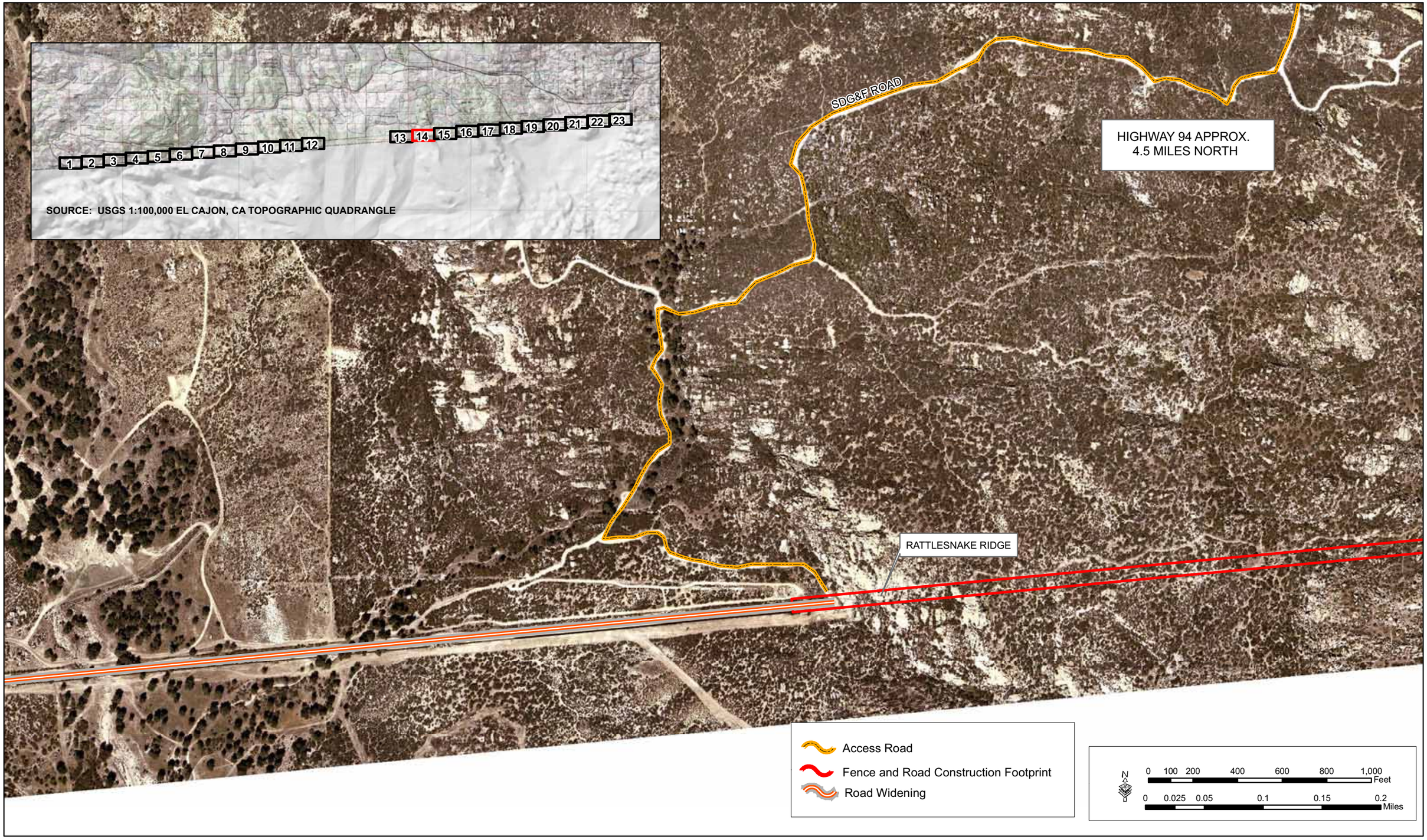

Map 14 - Rattlesnake Ridge, Road Widening, and Access Road

GSRC

November 2007

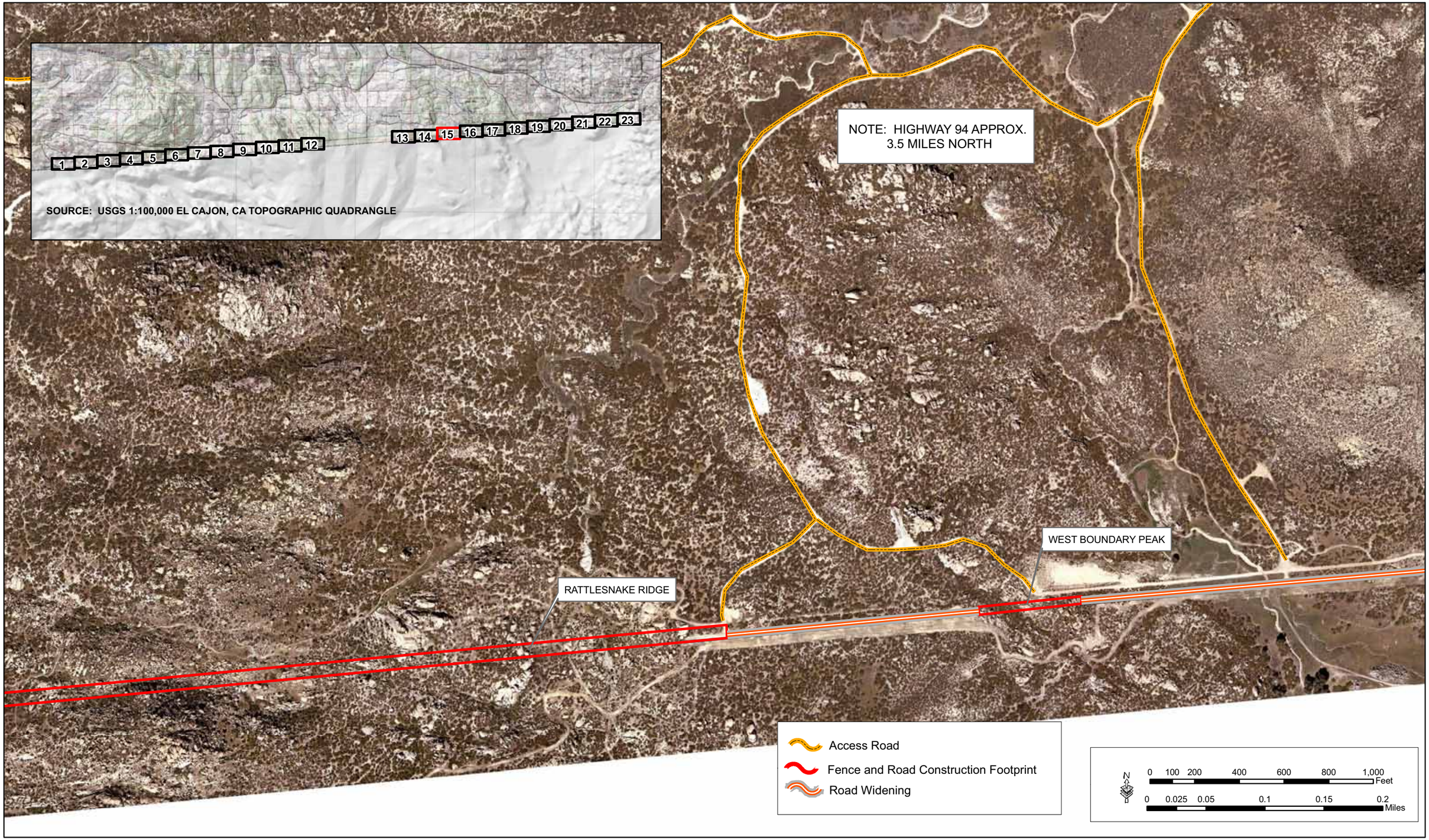

Map 15 - Rattlesnake Ridge, West Boundary Peak, Road Widening, and Access Roads

GSRC

November 2007

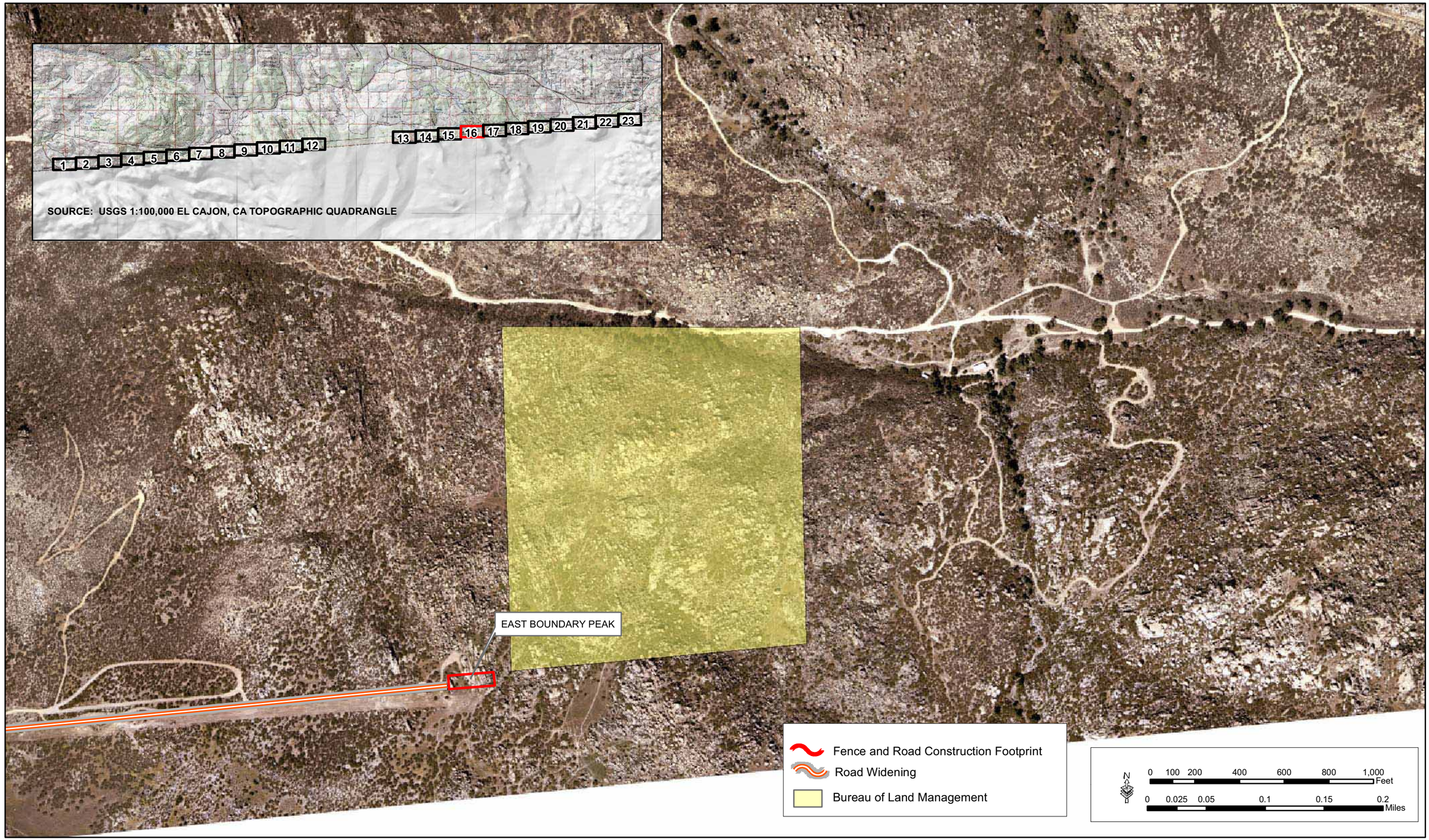

Map 16 - East Boundary Peak and Road Widening

GSRC

November 2007

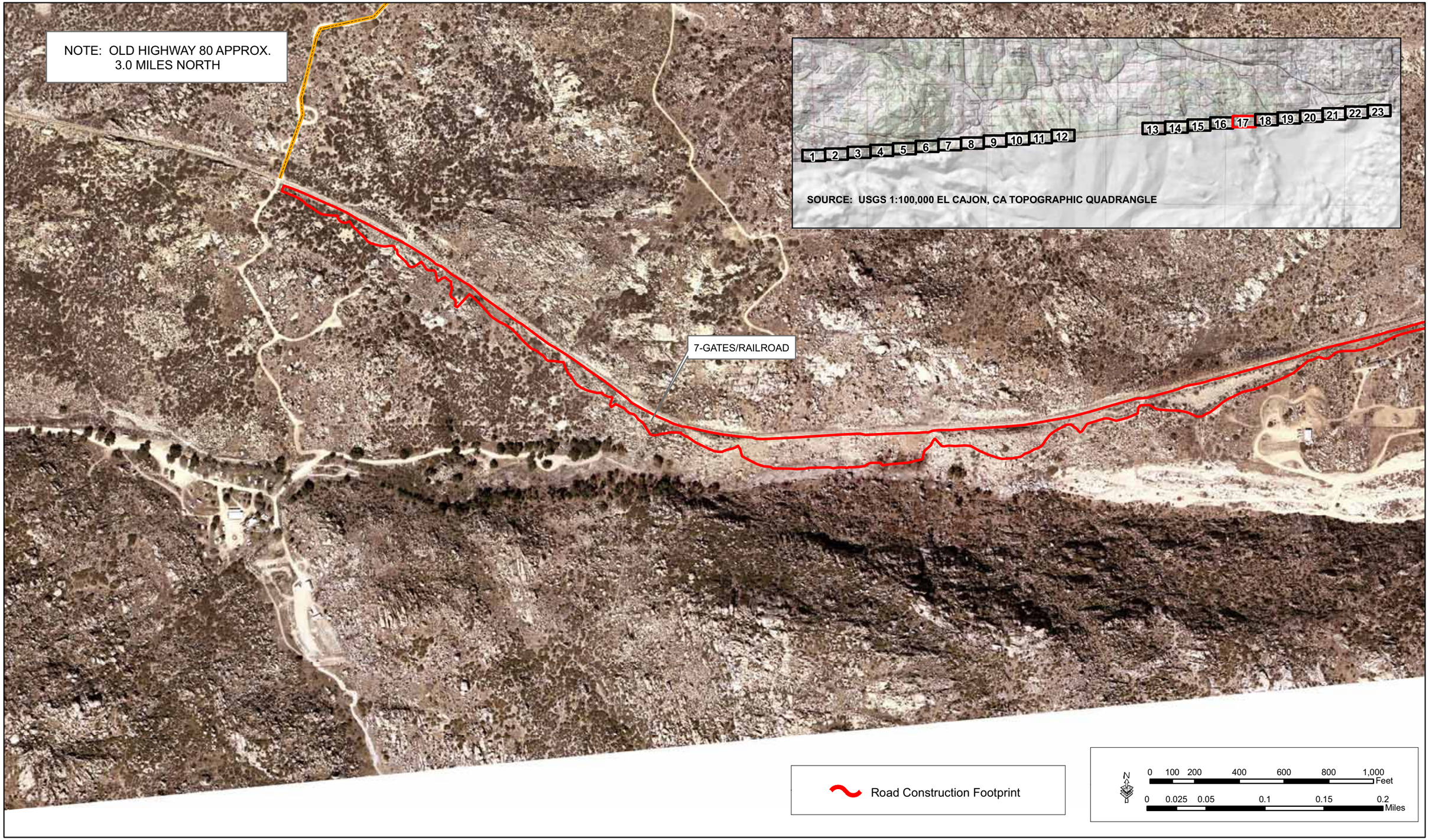

Map 17 - 7-Gates/Railroad and PVB Converted to Fence

GSRC

November 2007

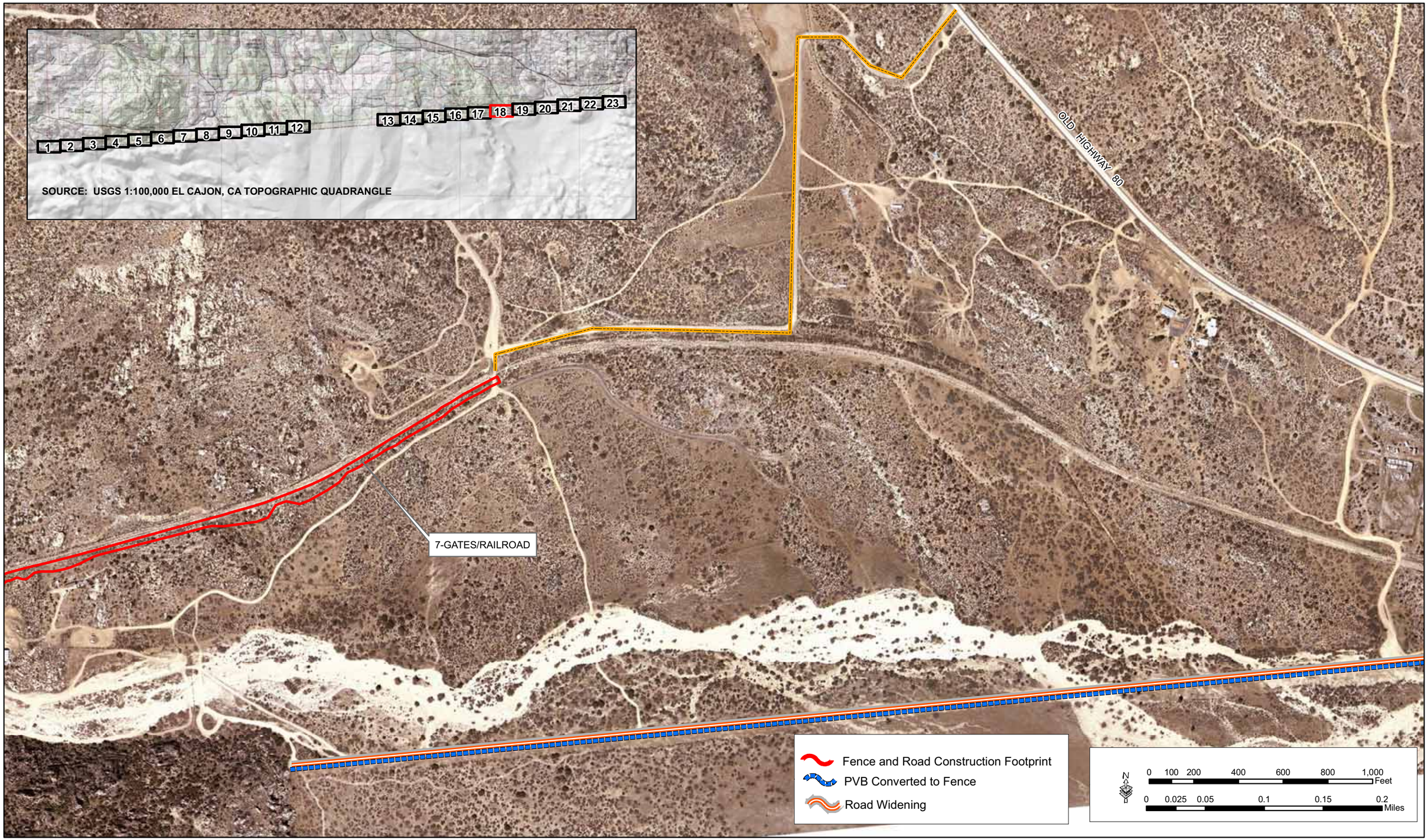

Map 18 - 7-Gates Railroad, Road Widening, and PVB Converted to Fence

GSRC

November 2007

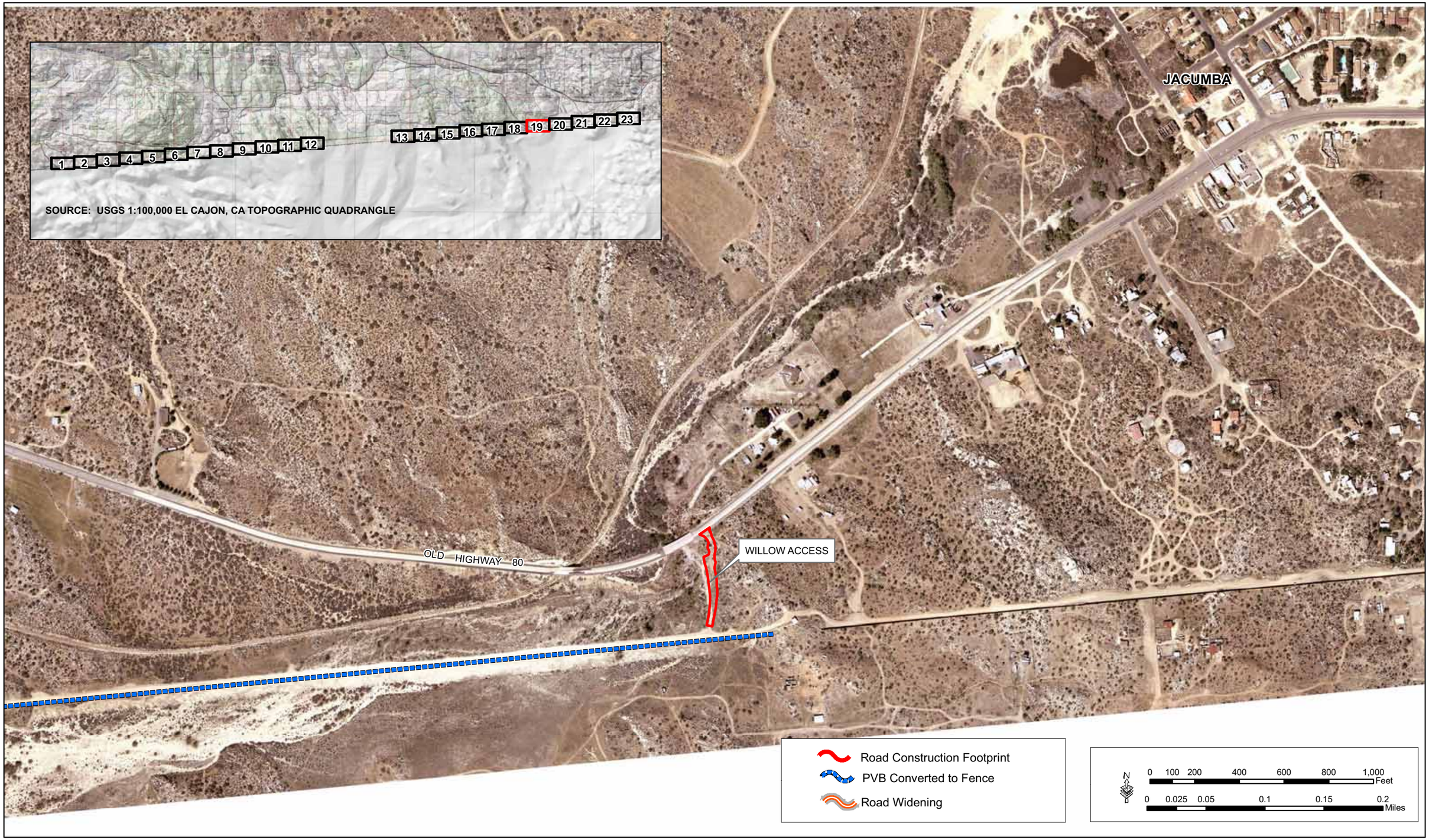

Map 19 - Willow Access, Road Widening, and PVB Converted to Fence

GSRC

November 2007

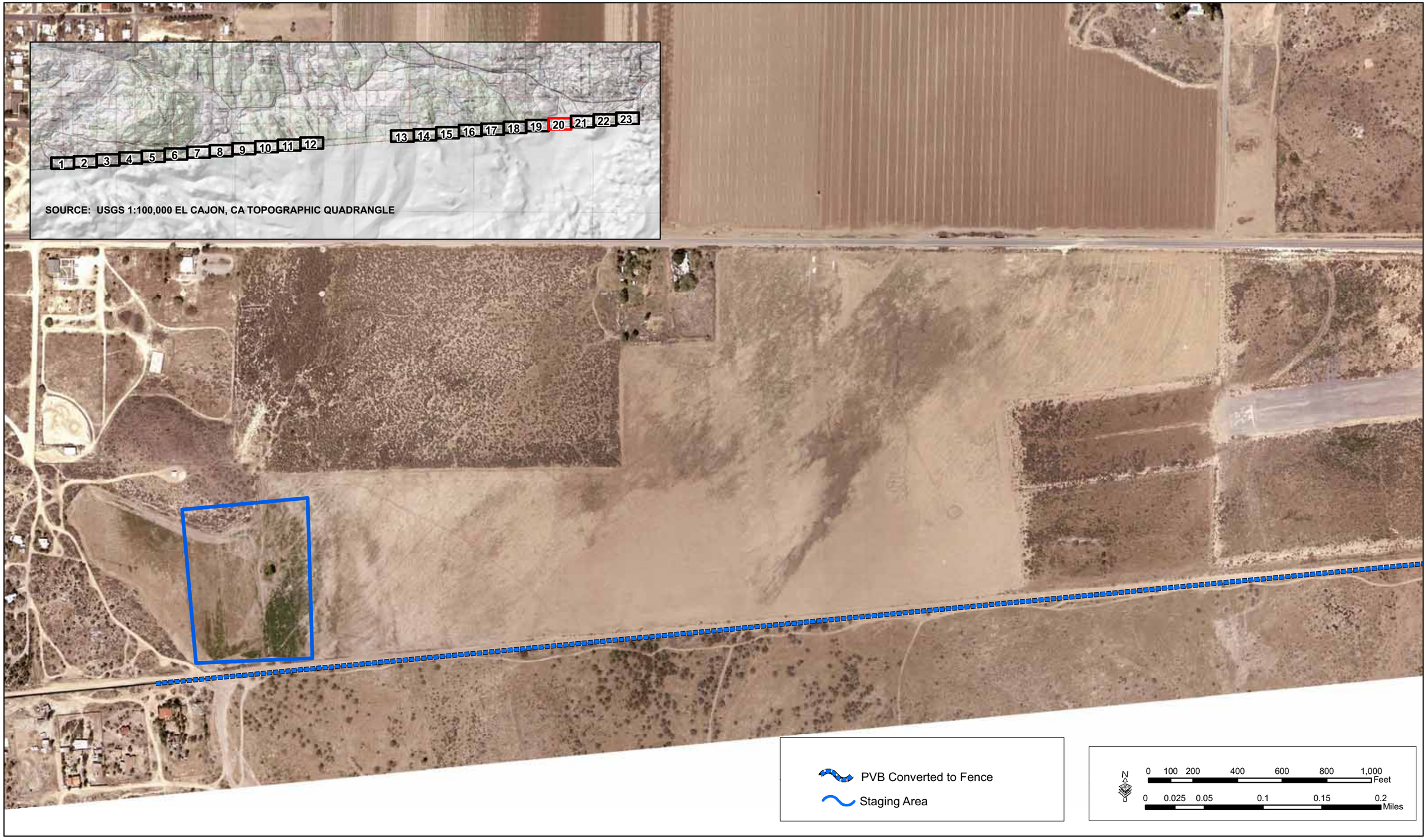

Map 20 - Staging Area and PVB Converted to Fence

GSRC

November 2007

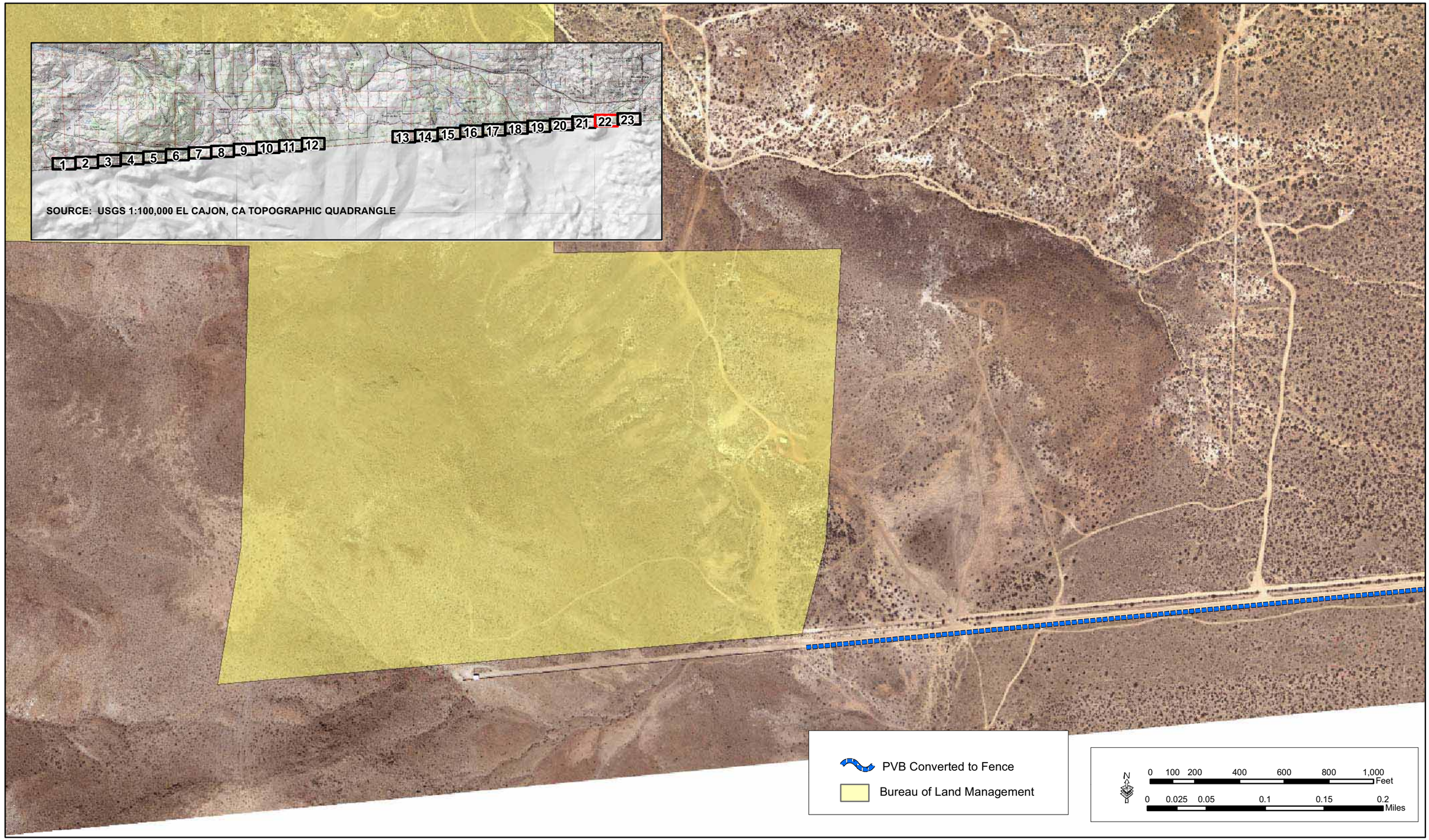

Map 22 - PVB Converted to Fence

GSRC

November 2007

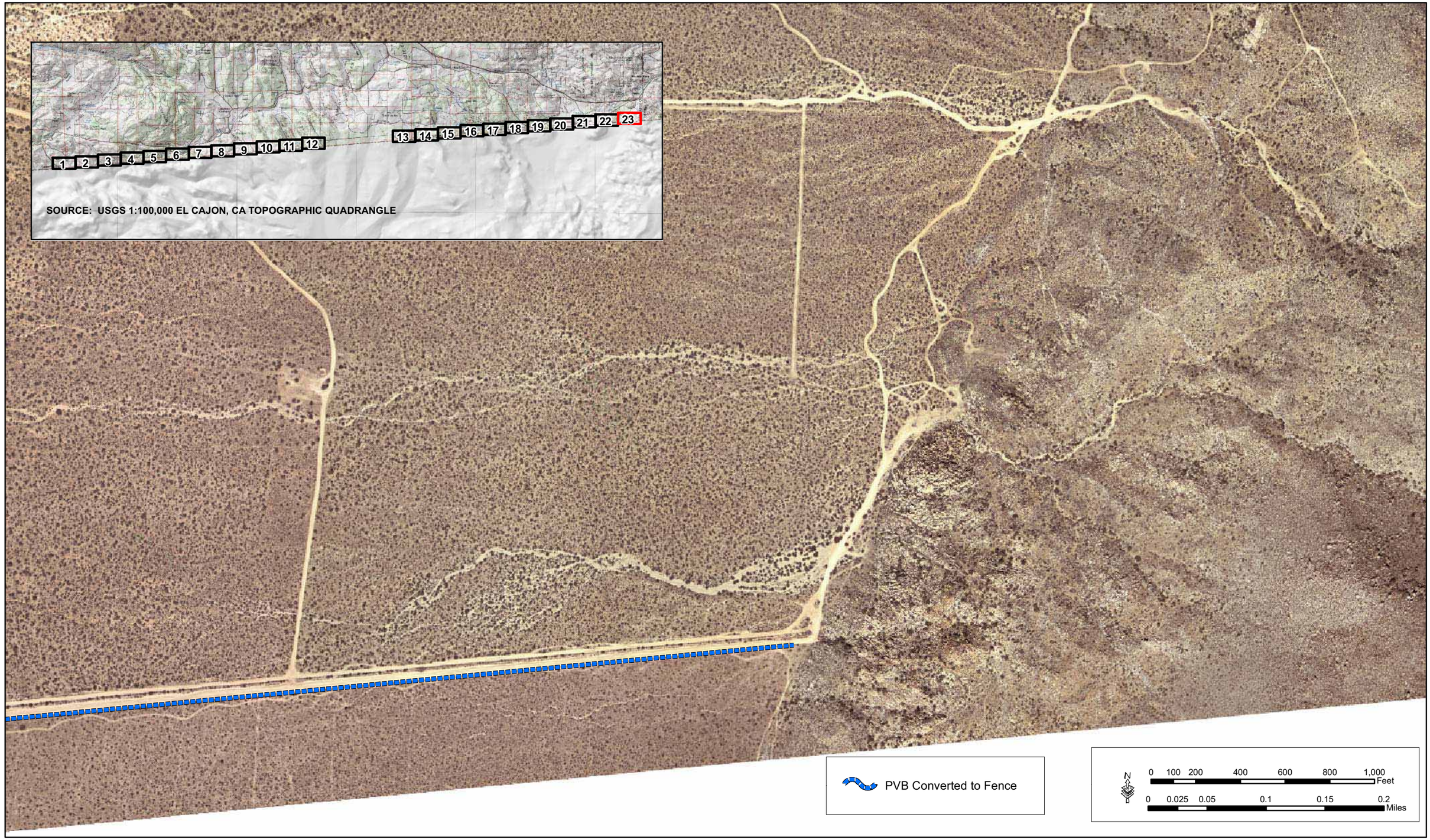

Map 23 - PVB Converted to Fence

GSRC

November 2007

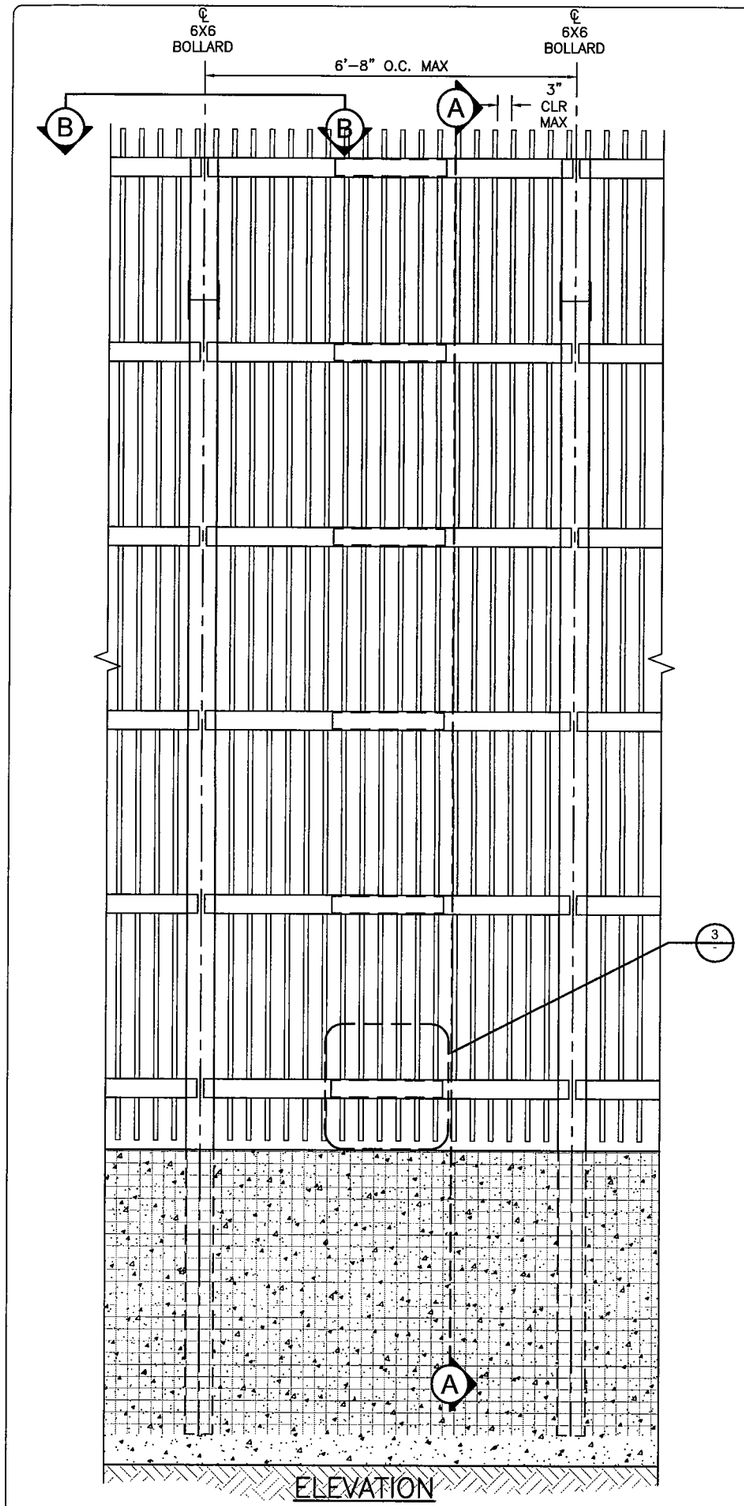

ELEVATION
(LOOKING SOUTH)

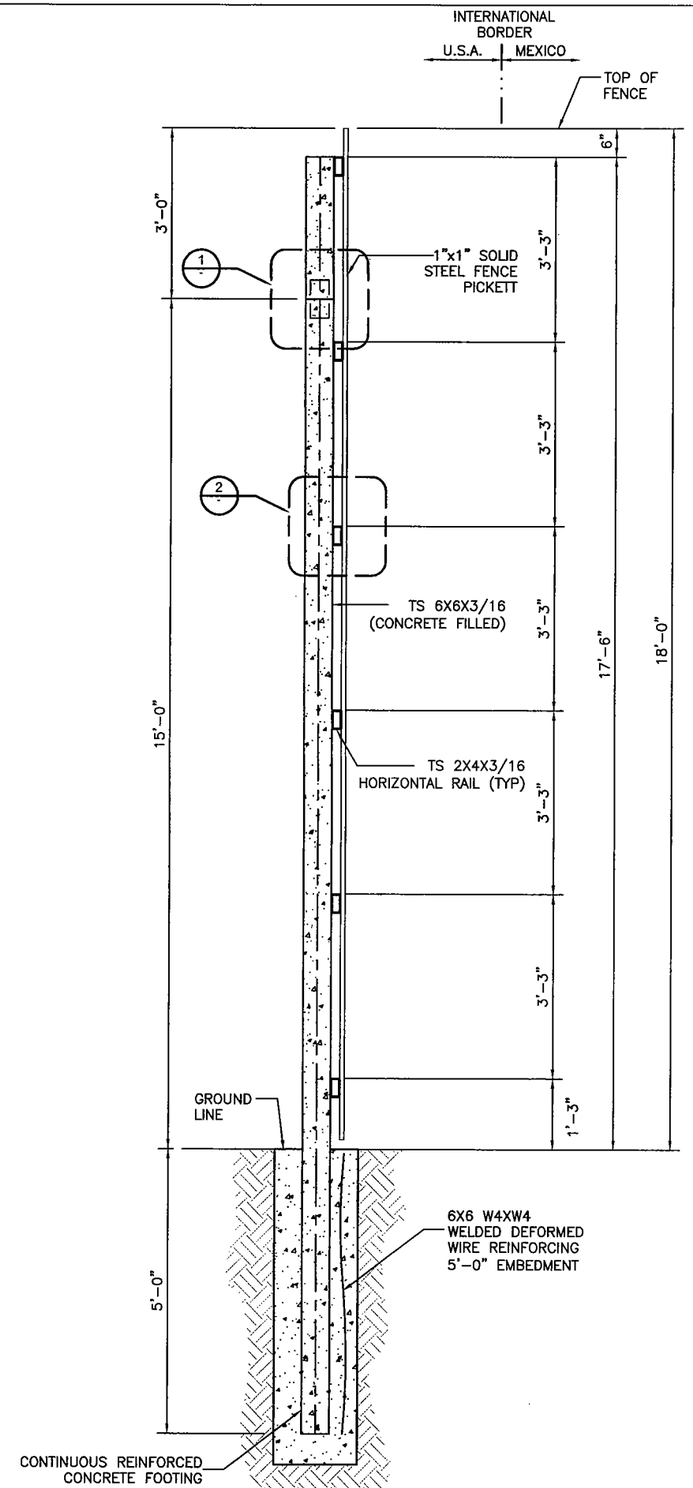

SECTION A–A

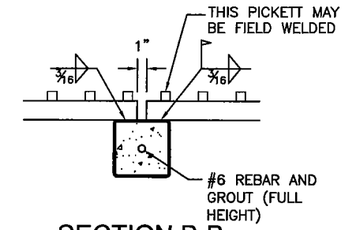

SECTION B-B

NOTE:
1. VALID FOR 90 MPH WIND

2. FOUNDATION DETAILS SHOWN REPRESENT MINIMUM DIMENSIONAL REQUIREMENTS AND MAY NEED INCREASED BASED ON FOUNDATION DESIGN.

US Army Corps of Engineers
Fort Worth District

Mark	Description	Date	Appr.

SCHEMATIC NOT FOR CONSTRUCTION

Baker
MICHAEL BAKER JR., INC.
2929 NORTH CENTRAL AVENUE
SUITE 800
PHOENIX, AZ 85012

Designed by: KAS	Date:	Rev.	
Dwn by: JN/KAS	Ckd by: JWB	Submitted by: Michael Baker Jr., Inc.	
Reviewed by: TQ		Plot date: 11/18/07	Baker Project No: 112319

PF225 CONCEPTUAL FENCE DESIGNS

PERSONNEL TYPE 1

SHEET REFERENCE NUMBER
P-1

I:\projects\usace\pf225\drawings\acad 2006\p-1.dwg

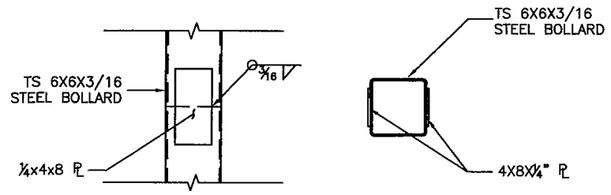

ELEVATION PLAN

DETAIL 1
OPTIONAL POST SPLICE

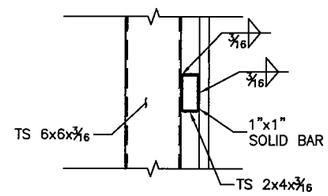

DETAIL 2
PICKETT & RAIL
ATTACHMENT

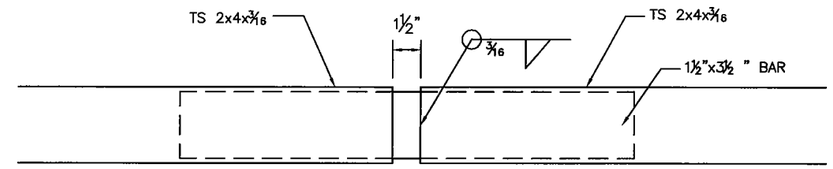

DETAIL 3
HORIZONTAL RAIL
EXPANSION JOINTS
(36' MAX SPACING)

US Army Corps of Engineers
Fort Worth District

Mark	Description	Date	Appr.

SCHEMATIC
NOT FOR
CONSTRUCTION

Baker
MICHAEL BAKER JR., INC
2929 NORTH CENTRAL AVENUE
SUITE 800
PHOENIX, AZ 85012

PF225
CONCEPTUAL
FENCE
DESIGNS

Designed by: KAS	Date:	Rev:
Dwn by: JN/KAS	Ckd by: JWB	Submitted by: Michael Baker Jr., Inc.
Reviewed by: TQ		Plot date: 11/18/07
		Baker Project No: 112319

PERSONNEL
TYPE 1

SHEET REFERENCE NUMBER:
P-1

I:\projects\usace\pf225\drawings\acad 2006\p-1.dwg

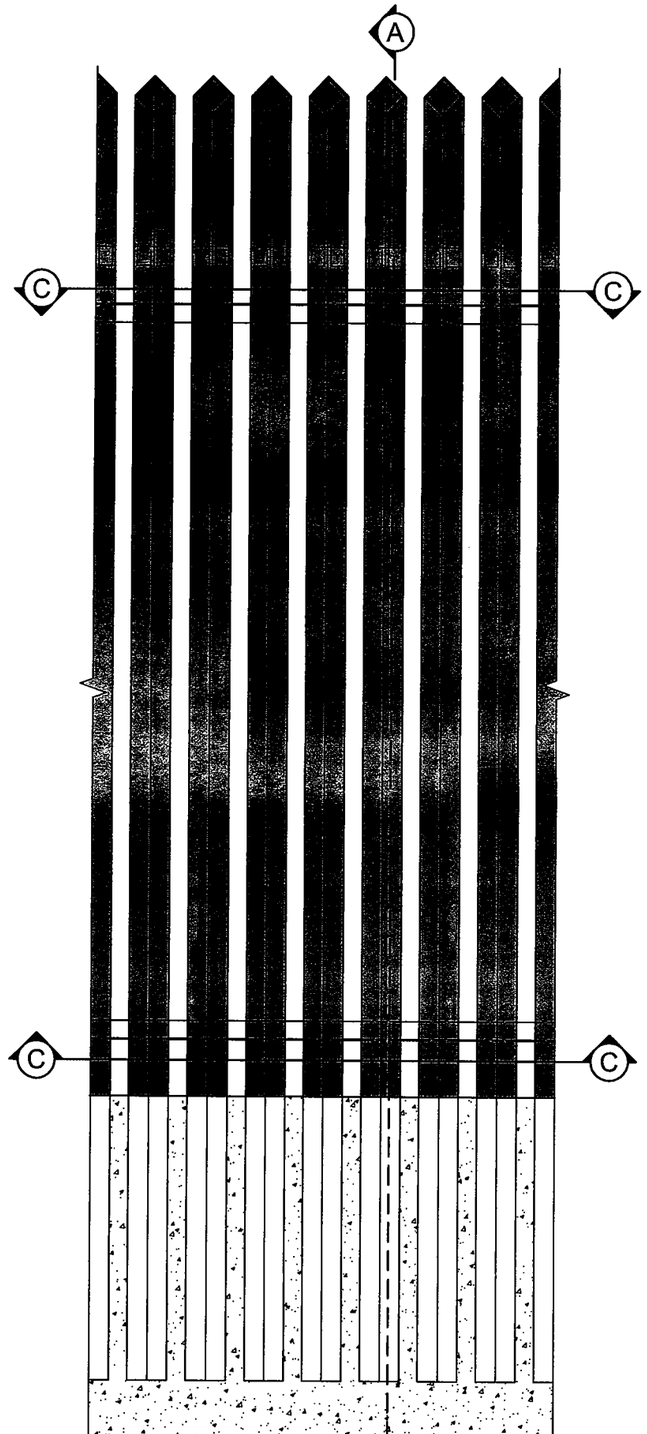

ELEVATION
(LOOKING SOUTH)

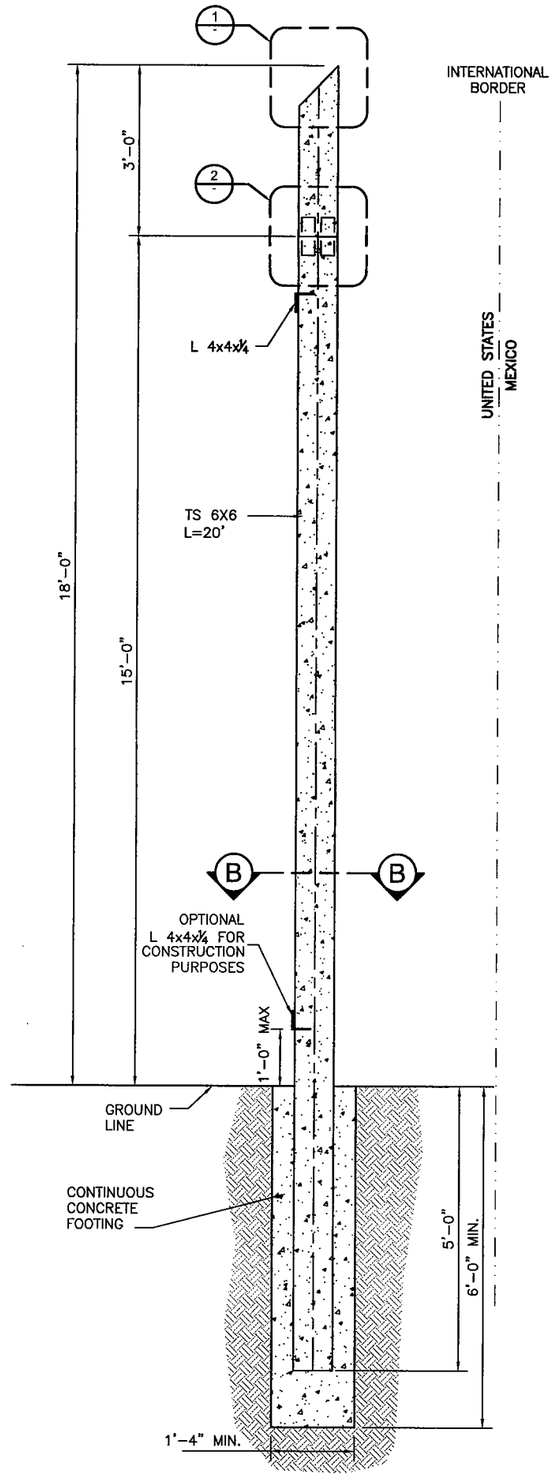

SECTION A-A

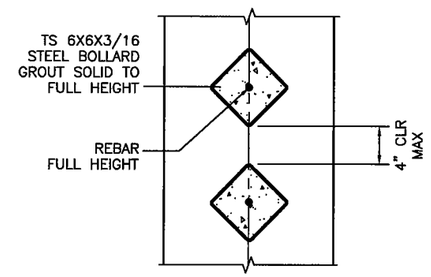

SECTION B-B

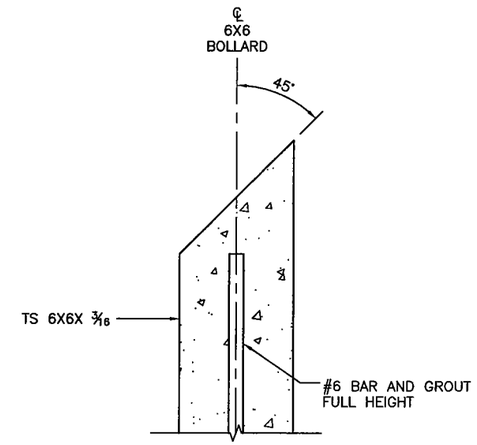

DETAIL 1

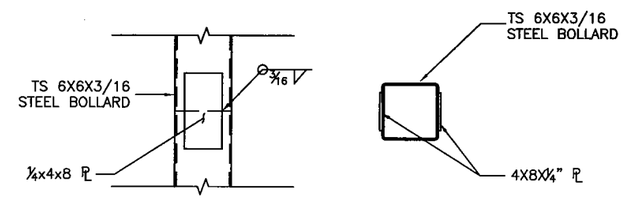

DETAIL 2

NOTE:
1. VALID FOR 140 MPH WIND

2. FOUNDATION DETAILS SHOWN REPRESENT MINIMUMDIMENSIONAL REQUIREMENTS AND MAY NEED TO BE INCREASED BASED ON FINAL DESIGN.

US Army Corps of Engineers
Fort Worth District

Mark	Description	Date	Appr.

SCHEMATIC
NOT FOR
CONSTRUCTION

Baker
MICHAEL BAKER JR., INC
2929 NORTH CENTRAL AVENUE SUITE 900
PHOENIX, AZ 85012

Designed by: KAS
Dwn by: MC
Ckd by: JWB
Reviewed by: TQ
Date:
Rev.
Submitted by: Michael Baker Jr., Inc.
Plot date: 11/18/07
Baker Project No: 112319

PF225
CONCEPTUAL
FENCE
DESIGNS

PERSONNEL
TYPE 2

SHEET REFERENCE NUMBER:
P-2

I:\projects\usace\pf225\drawings\acad 2006\p-2.dwg

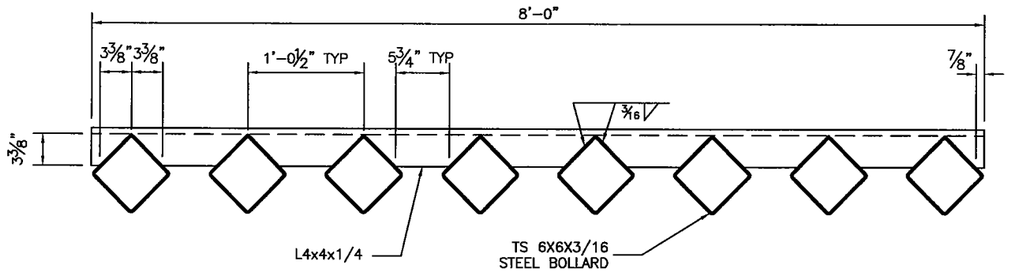

SECTION C-C

US Army Corps of Engineers
Fort Worth District

Mark	Description	Date	Appr.

SCHEMATIC NOT FOR CONSTRUCTION

Baker
MICHAEL BAKER, JR., INC
2929 NORTH CENTRAL AVENUE
SUITE 800
PHOENIX, AZ 85012

PF225 CONCEPTUAL FENCE DESIGNS

Designed by: KAS	Date:	Rev:
Dwn by: MC / Ckd by: JWB	Submitted by: Michael Baker Jr., Inc.	
Reviewed by: TQ	Plot date: 11/18/07	Baker Project No: 112319

PERSONNEL TYPE 2

SHEET REFERENCE NUMBER
P-2

I:\projects\usace\pf225\drawings\acad 2006\p-2.dwg

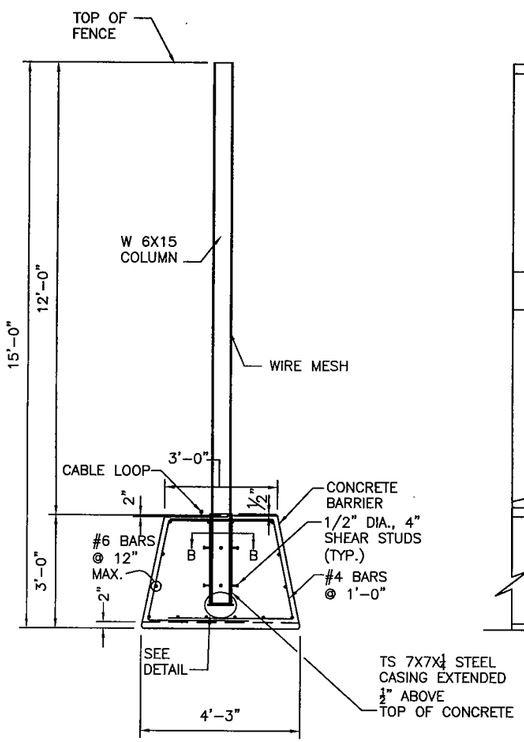

SECTION A-A

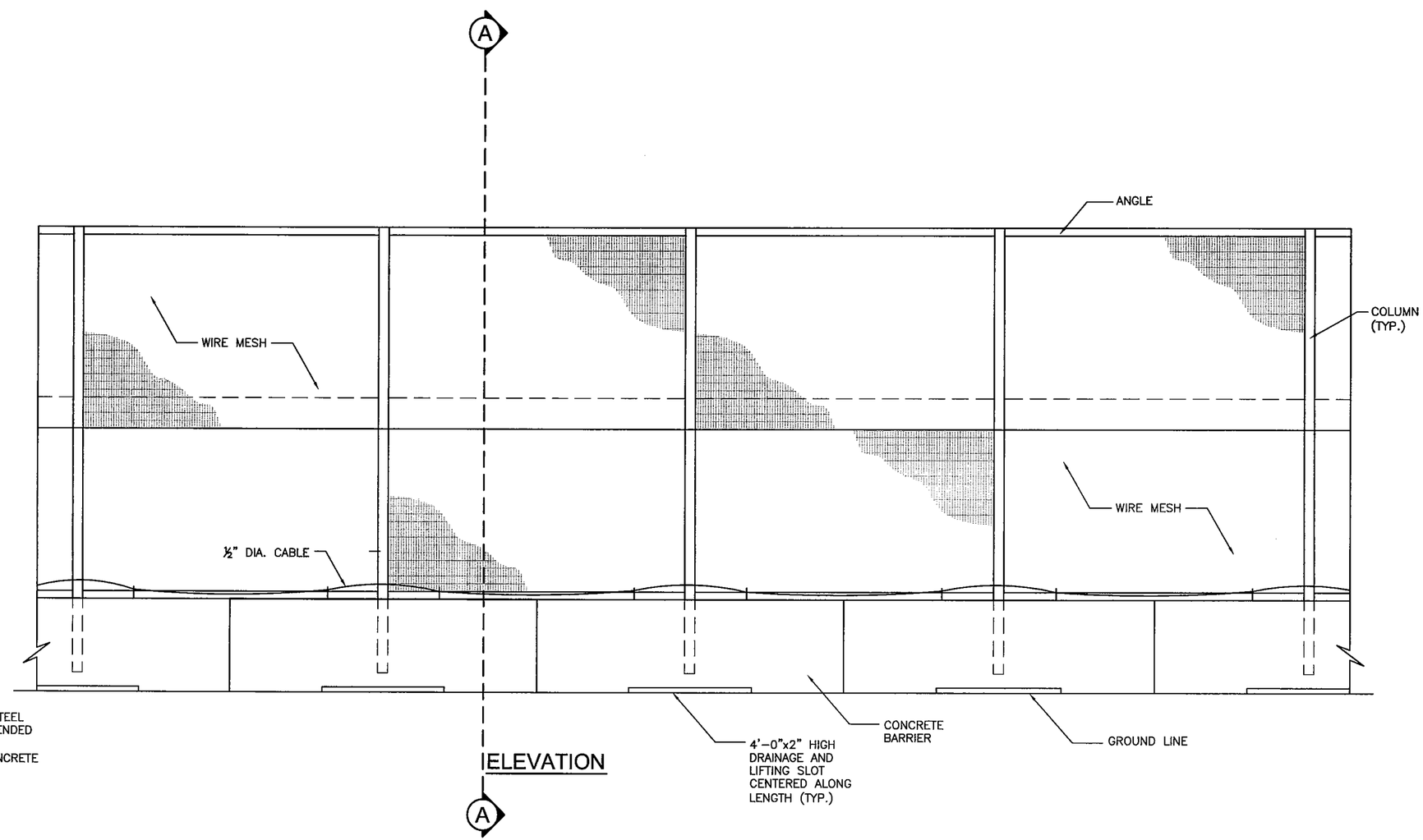

ELEVATION

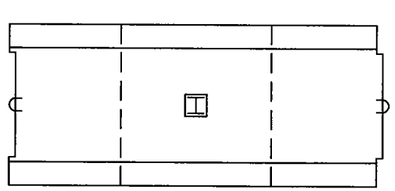

PLAN VIEW
10' CONCRETE SEGMENT

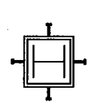

SECTION B-B

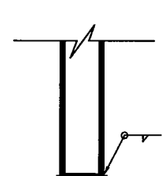

DETAIL

¼" X 8" X 8" A36 BASE PLATE AT BOTTOM OF PIPE SLEEVE (TYP.)

NOTE:
1. VALID FOR 90 MPH WIND

2. THIS FENCE CONSTRUCTION IS INTENDED TO BE DISMANTLED READILY. COORDINATE WITH BORDER CONTROL ON LOCATION AND NUMBER OF LOCK POINTS FOR ½" CABLE.

US Army Corps of Engineers
Fort Worth District

Mark	Description	Date	Appr.

SCHEMATIC NOT FOR CONSTRUCTION

Baker
MICHAEL BAKER JR., INC
2929 NORTH CENTRAL AVENUE SUITE 900
PHOENIX, AZ 85012

Designed by: KAS	Date:	Rev.	
Dwn by: JN/KAS	Ckd by: JWB	Submitted by: Michael Baker Jr., Inc.	
Reviewed by: TQ		Plot date: 11/18/07	Baker Project No: 112319

PF225 CONCEPTUAL FENCE DESIGNS

PERSONNEL TYPE 3-15

SHEET REFERENCE NUMBER
P-3-15

I:\projects\usace\pf225\drawings\acad 2006\p-3-15.dwg

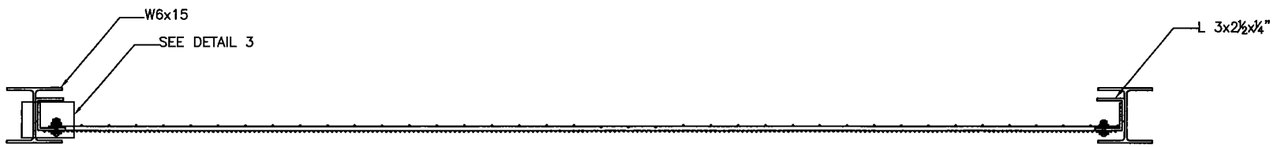

SECTION C-C

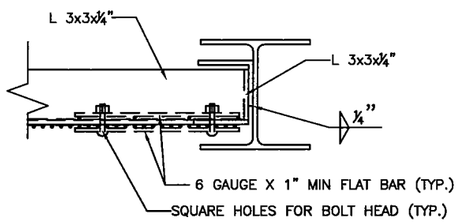

DETAIL 2
FENCE FABRIC ATTACHMENT

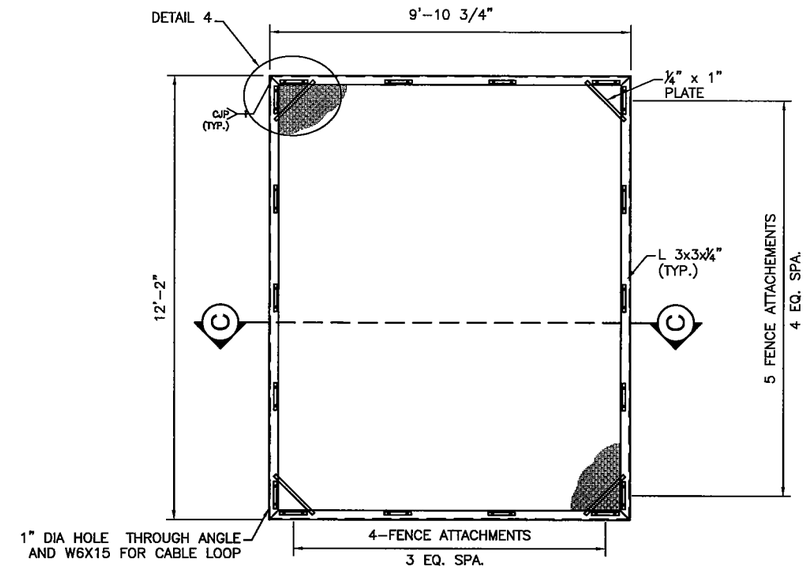

STANDARD FENCE PANEL

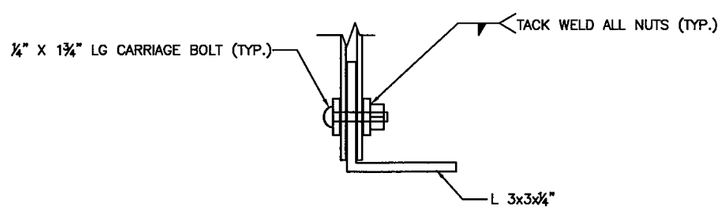

DETAIL 3

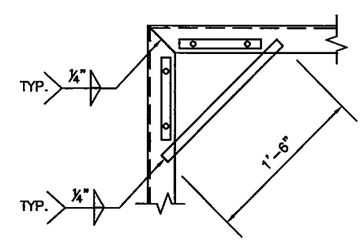

DETAIL 4

US Army Corps of Engineers
Fort Worth District

Mark	Description	Date	Appr.

SCHEMATIC NOT FOR CONSTRUCTION

Baker
MICHAEL BAKER JR., INC
2929 NORTH CENTRAL AVENUE
SUITE 1000
PHOENIX, AZ 85012

Designed by: RB	Date:	Rev.	
Dwn by: JN	Ckd by: TEQ	Submitted by: Michael Baker Jr., Inc.	
Reviewed by: DJL		Plot date: 11/16/07	Baker Project No: 112319

PF225 CONCEPTUAL FENCE DESIGNS

PERSONNEL TYPE 3-15

SHEET REFERENCE NUMBER:
P-3-15

I:\projects\usacoe\pf225\drawings\acad 2006\p-3-15.dwg —

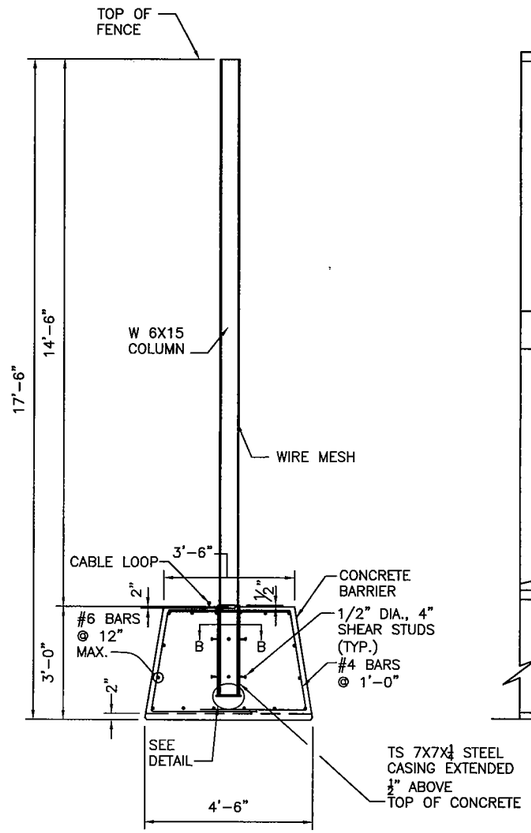

SECTION A-A

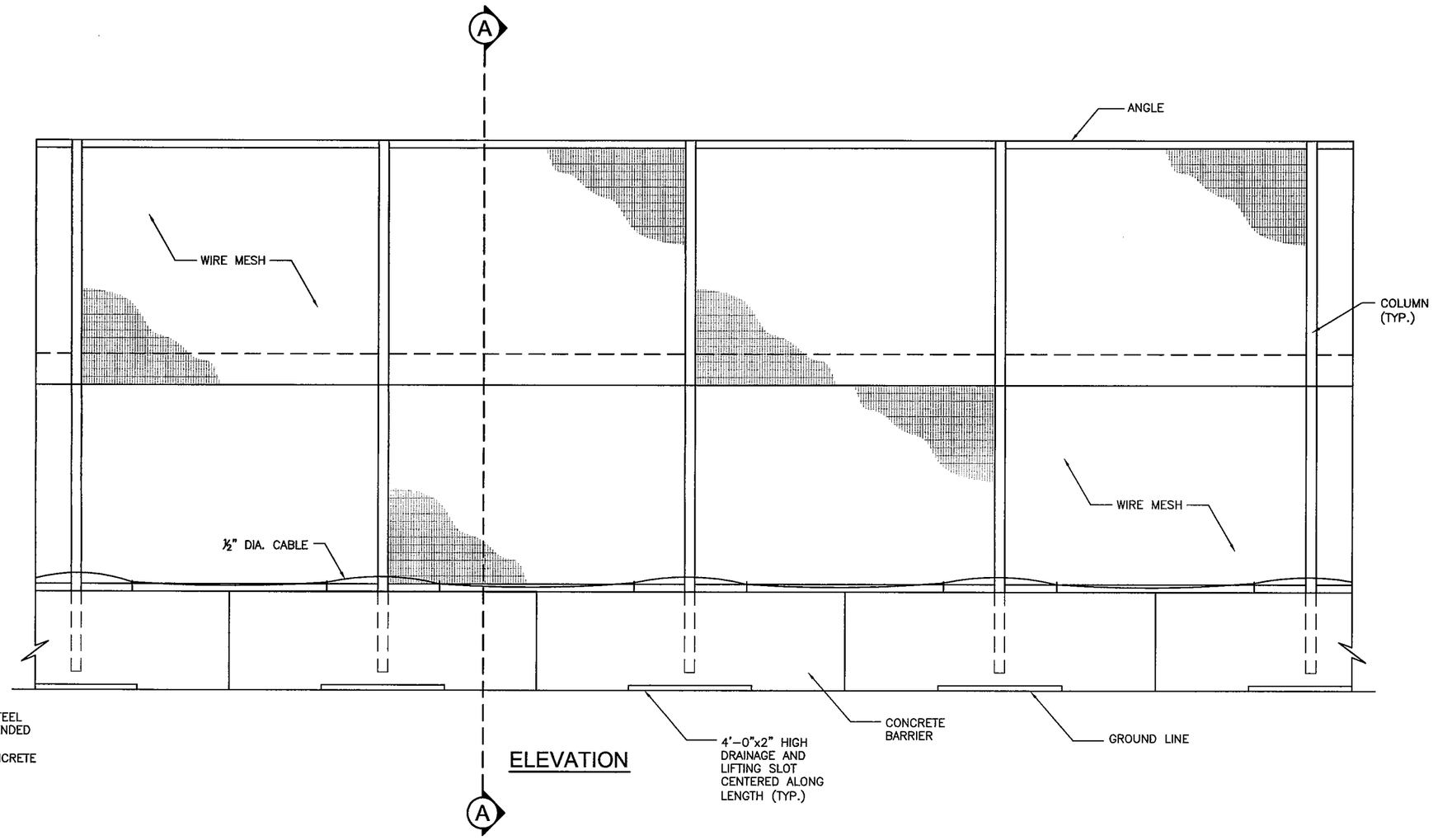

ELEVATION

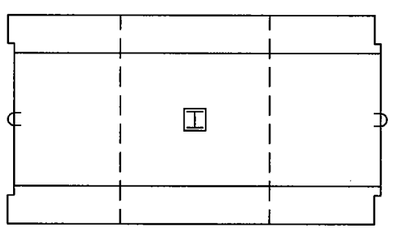

PLAN VIEW
10' CONCRETE SEGMENT

SECTION B-B

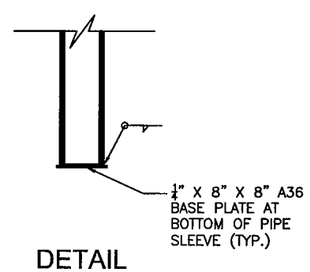

DETAIL

NOTE:
1. VALID FOR 90 MPH WIND

2. THIS FENCE CONSTRUCTION IS INTENDED TO BE DISMANTLED READILY. COORDINATE WITH BORDER CONTROL ON LOCATION AND NUMBER OF LOCK POINTS FOR ½" CABLE.

US Army Corps of Engineers
Fort Worth District

Mark	Description	Date	Appr.

SCHEMATIC NOT FOR CONSTRUCTION

Baker
MICHAEL BAKER JR., INC
2222 NORTH CENTRAL AVENUE
SUITE 800
PHOENIX, AZ 85012

Designed by: KAS
Dwn by: KAS/KNB
Ckd by: JWB
Reviewed by: TQ
Date:
Rev.
Submitted by: Michael Baker Jr., Inc.
Plot date: 11/18/07
Baker Project No: 112319

PF225 CONCEPTUAL FENCE DESIGNS

PERSONNEL TYPE 3-18

SHEET REFERENCE NUMBER
P-3-18

I:\projects\usace\pf225\drawings\acad 2006\p-3-18.dwg

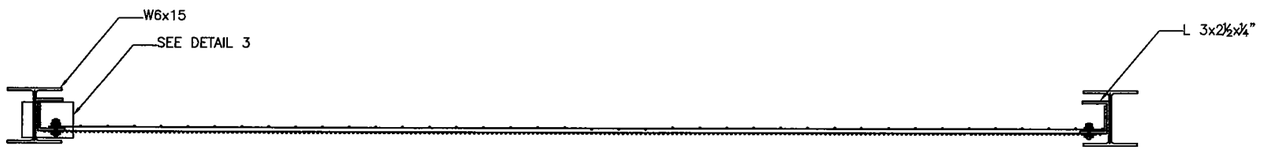

SECTION B-B

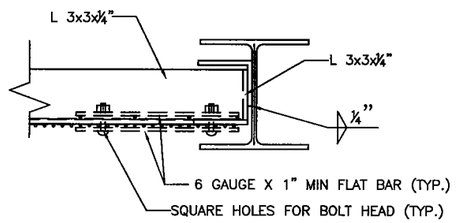

DETAIL 2
FENCE FABRIC ATTACHMENT

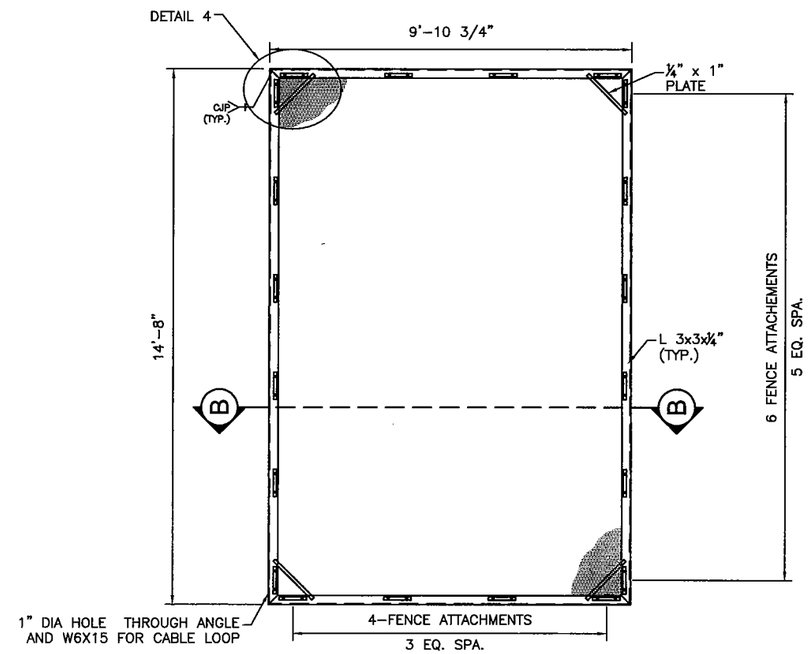

STANDARD FENCE PANEL

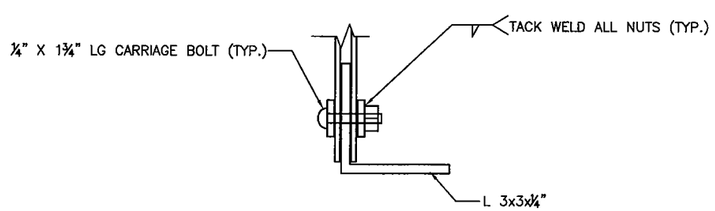

DETAIL 3

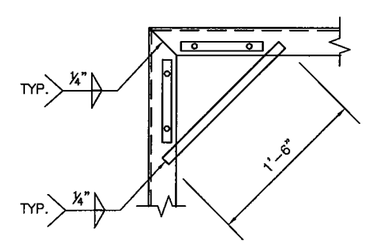

DETAIL 4

US Army Corps of Engineers
Fort Worth District

Mark	Description	Date	Appr.

SCHEMATIC NOT FOR CONSTRUCTION

Baker
MICHAEL BAKER JR., INC
2929 NORTH CENTRAL AVENUE
SUITE 600
PHOENIX, AZ 85012

Designed by: KAS	Date:	Rev.	
Dwn by: KAS	Ckd by: JWB	Submitted by: Michael Baker Jr., Inc.	Plot date: 11/18/07
Reviewed by: TQ			Baker Project No: 112319

PF225 CONCEPTUAL FENCE DESIGNS

PERSONNEL
TYPE 3-18

SHEET REFERENCE NUMBER
P-3-18

I:\projects\usace\pf225\drawings\acad 2006\p-3-18.dwg

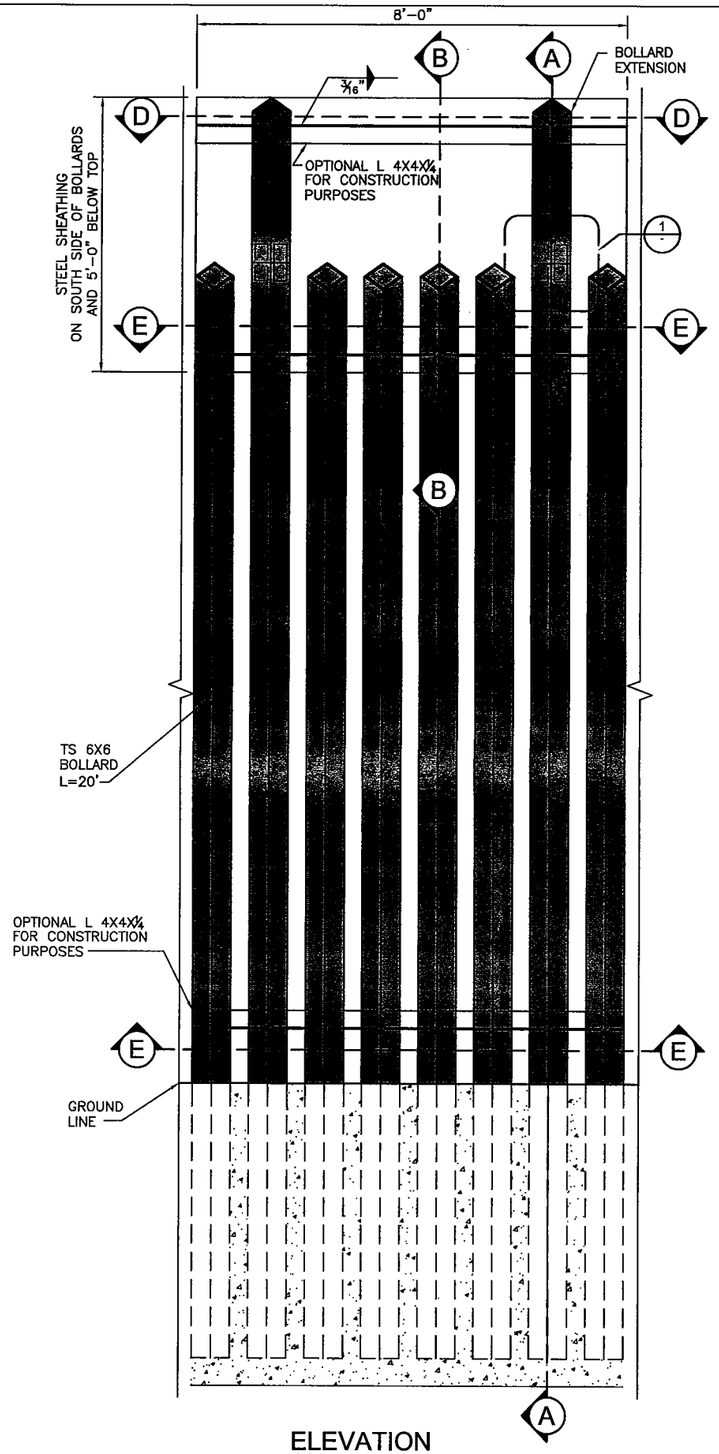

ELEVATION
(LOOKING SOUTH)

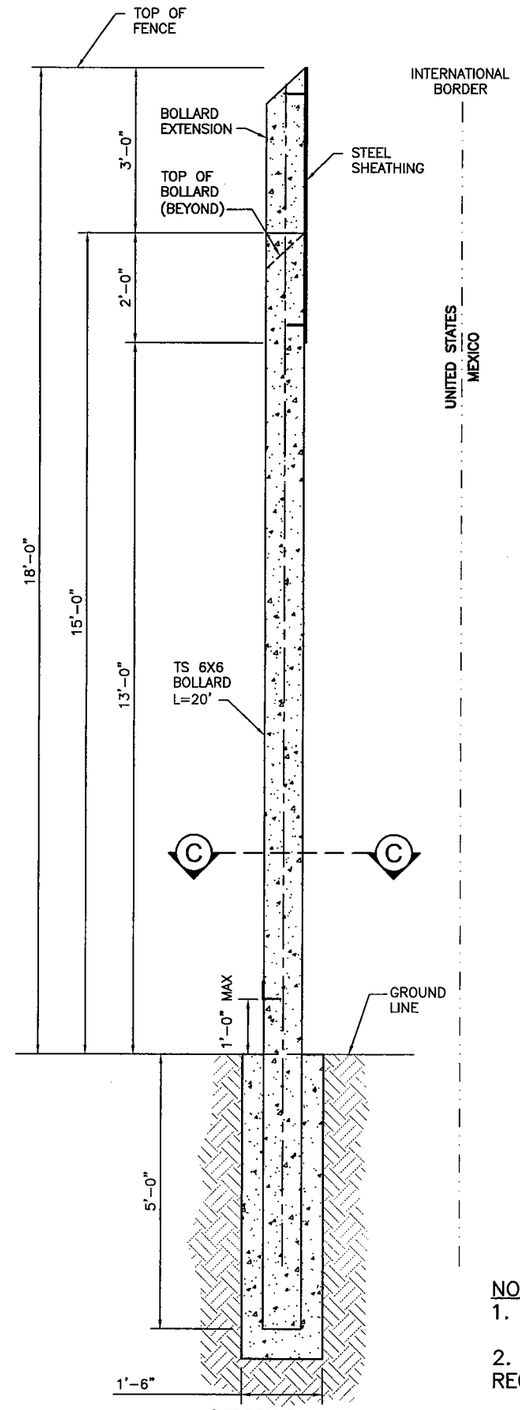

SECTION A-A

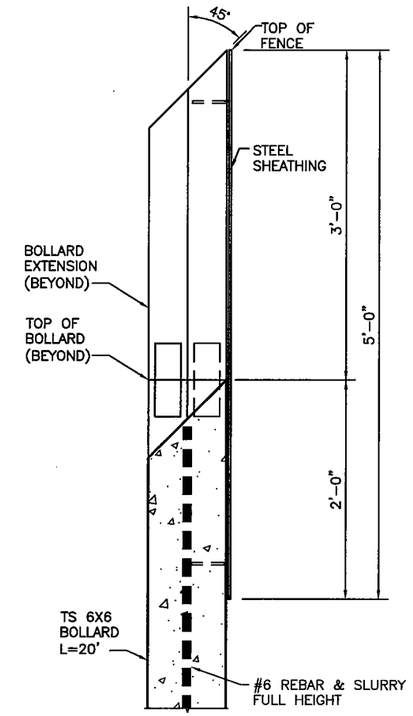

SECTION B-B

NOTE:
1. VALID FOR 90 MPH WIND

2. FOUNDATION DETAILS SHOWN REPRESENT MINIMUM DIMENSIONAL REQUIREMENTS AND MAY NEED TO BE INCREASED BASED ON FINAL DESIGN.

US Army Corps of Engineers
Fort Worth District

Mark	Description	Date	Appr.

SCHEMATIC NOT FOR CONSTRUCTION

Baker
MICHAEL BAKER JR., INC.
2929 NORTH CENTRAL AVENUE
SUITE 800
PHOENIX, AZ 85012

Designed by: KAS	Date:	Rev.
Dwn by: MC/MKB	Ckd by: JWB	Submitted by: Michael Baker Jr., Inc.
Reviewed by: TQ		Plot date: 11/18/07 Baker Project No: 112319

PF225 CONCEPTUAL FENCE DESIGNS

PERSONNEL - VEHICLE TYPE 1

SHEET REFERENCE NUMBER
PV-1

I:\projects\usace\pf225\drawing\acad 2006\pv-1.dwg

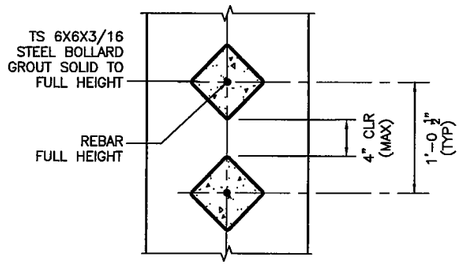

SECTION C-C

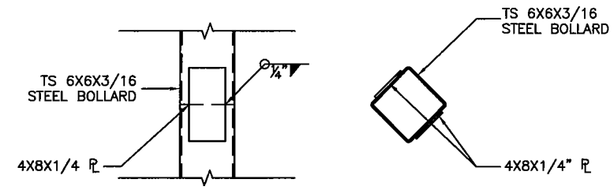

ELEVATION PLAN

DETAIL 1
OPTIONAL SPLICE

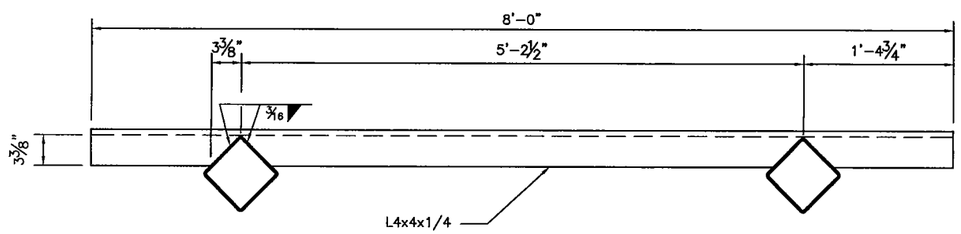

SECTION D-D

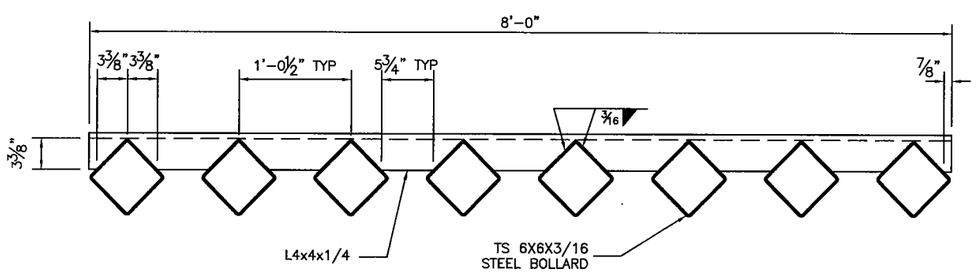

SECTION E-E

US Army Corps of Engineers
Fort Worth District

Mark	Description	Date	Appr.

SCHEMATIC
NOT FOR
CONSTRUCTION

Baker
MICHAEL BAKER JR., INC
2809 NORTH CENTRAL AVENUE
SUITE 800
PHOENIX, AZ 85012

Designed by: KAS	Date:	Rev.	
Dwn by: MC	Ckd by: JWB	Submitted by: Michael Baker Jr., Inc.	
Reviewed by: TQ		Plot date: 11/18/07	Baker Project No: 112319

PF225
CONCEPTUAL
FENCE
DESIGNS

PERSONNEL -
VEHICLE
TYPE 1

SHEET
REFERENCE
NUMBER:
PV-1

i:\projects\usace\pf225\drawings\acad 2006\pv-1.dwg

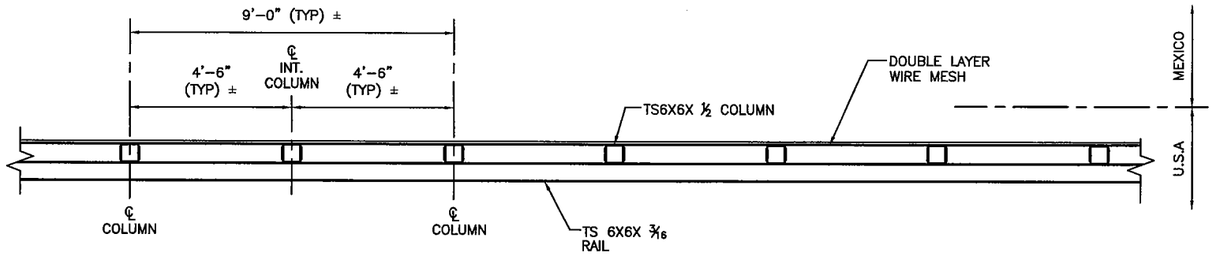

PLAN VIEW

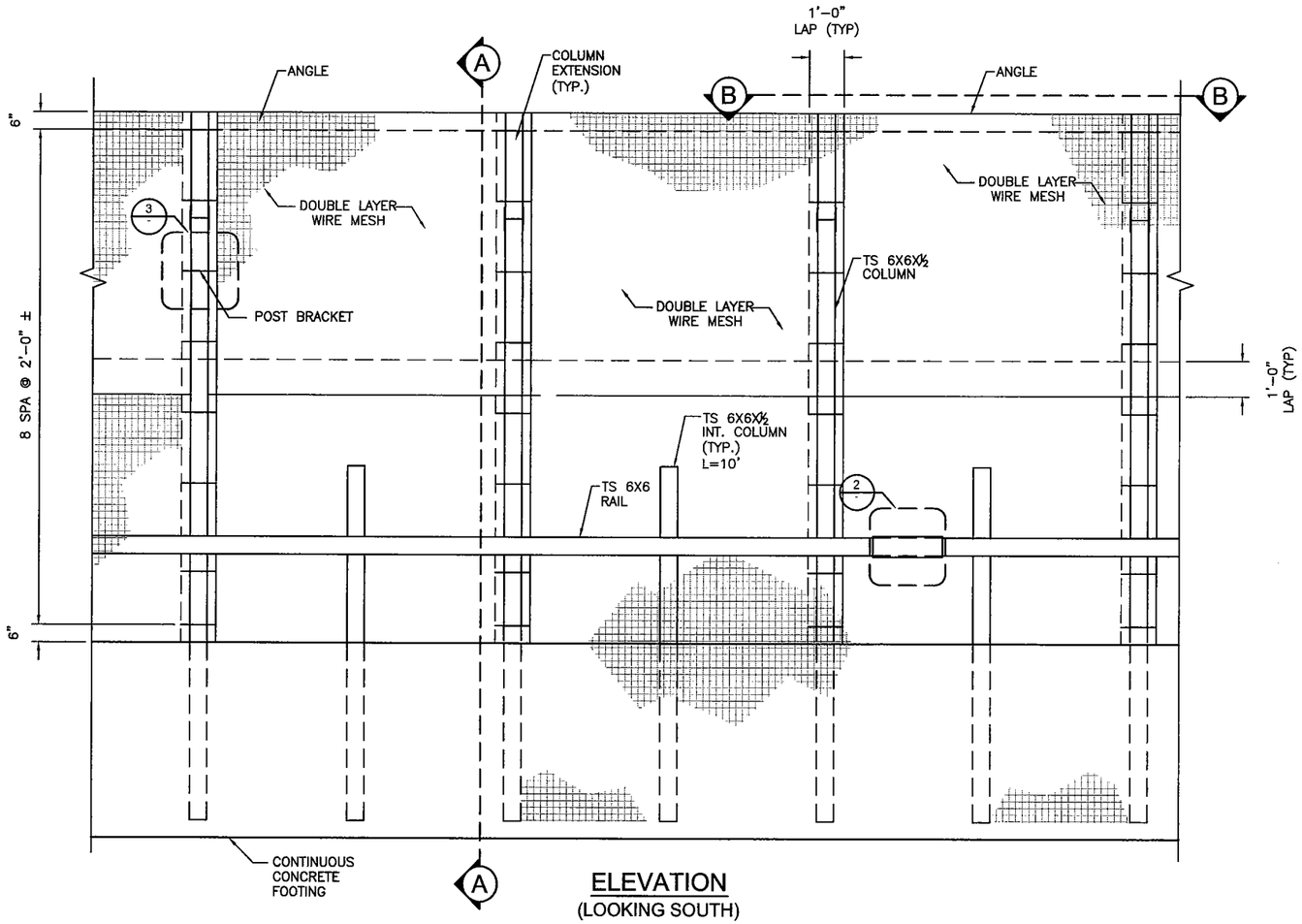

ELEVATION
(LOOKING SOUTH)

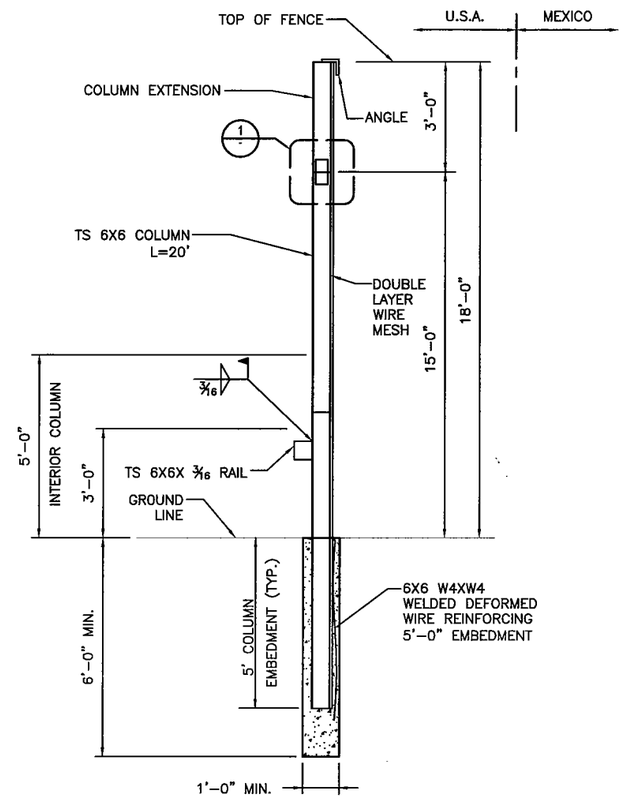

SECTION A-A

NOTES:
1. VALID FOR 90 MPH WIND.

2. FOUNDATION DETAILS SHOWN REPRESENT MINIMUM DIMENSIONAL REQUIREMENTS AND SHALL BE INCREASED IF NECESSARY BASED ON FOUNDATION DESIGN.

US Army Corps of Engineers
Fort Worth District

Mark	Description	Date	Appr.

SCHEMATIC NOT FOR CONSTRUCTION

Baker
MICHAEL BAKER JR., INC
2929 NORTH CENTRAL AVENUE
SUITE 600
PHOENIX, AZ 85012

Designed by: KAS		Date:	Rev.
Dwn by: KAS/MC	Ckd by: JWB	Submitted by: Michael Baker Jr., Inc.	
Reviewed by: TQ		Plot date: 11/18/07	Baker Project No: 112319

PF225 CONCEPTUAL FENCE DESIGNS

PERSONNEL - VEHICLE TYPE 2A

SHEET REFERENCE NUMBER
PV-2A

I:\projects\usace\pf225\drawings\acad 2006\pv-2a-1.dwg

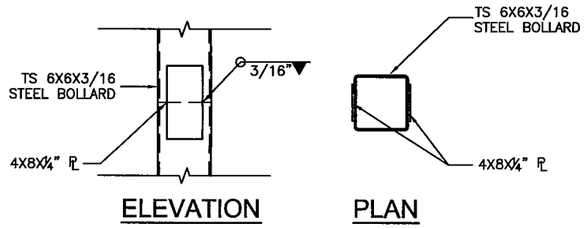

DETAIL 1
OPTIONAL SPLICE

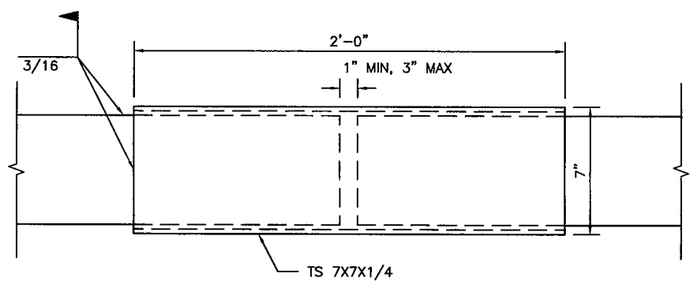

DETAIL 2
RAIL SPLICE (36' MAX SPACE)

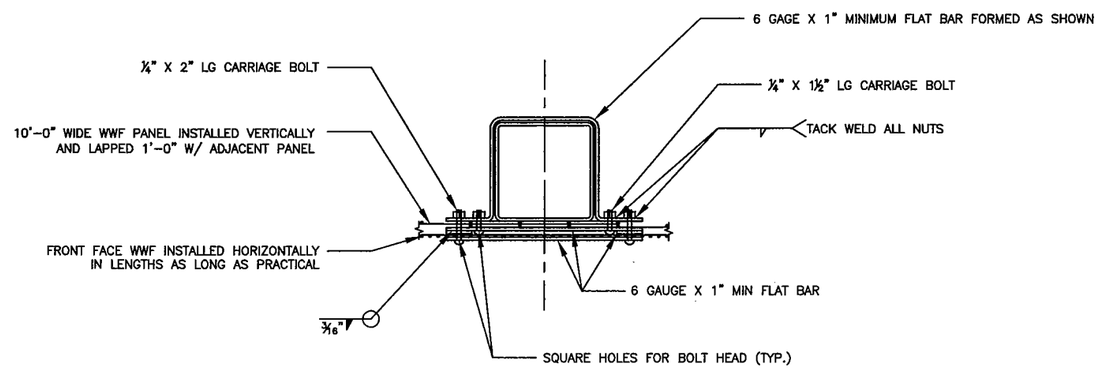

DETAIL 3
POST BRACKET

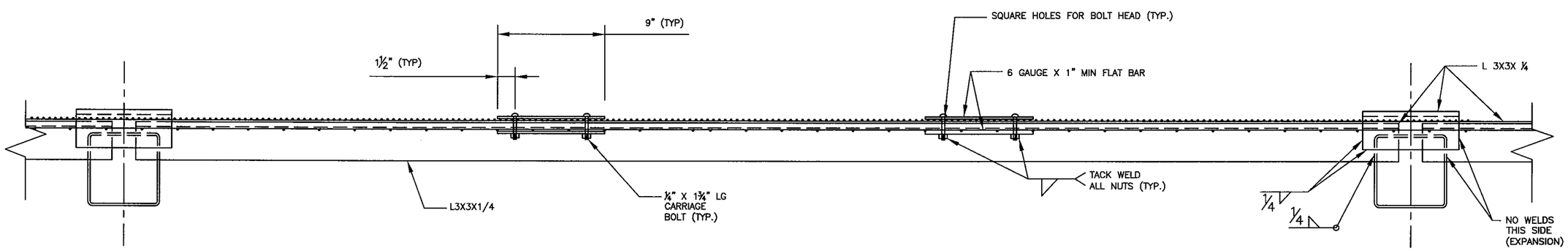

SECTION B-B
TOP HORIZONTAL RAIL DETAIL

US Army Corps
of Engineers
Fort Worth District

Mark	Description	Date	Appr.

SCHEMATIC
NOT FOR
CONSTRUCTION

Baker
MICHAEL BAKER JR., INC
2929 NORTH CENTRAL AVENUE
SUITE 800
PHOENIX, AZ 85012

Designed by: KAS	Date:	Rev.
Dwn by: KAS	Ckd by: JWB	Submitted by: Michael Baker Jr., Inc.
Reviewed by: TQ		Plot date: 11/18/07
		Baker Project No: 112319

PF225
CONCEPTUAL
FENCE
DESIGNS

PERSONNEL -
VEHICLE
TYPE 2A

SHEET
NOTEBOOK
NUMBER

PV-2A

I:\projects\usace\pf225\drawings\acad 2006\pv-2a-1.dwg

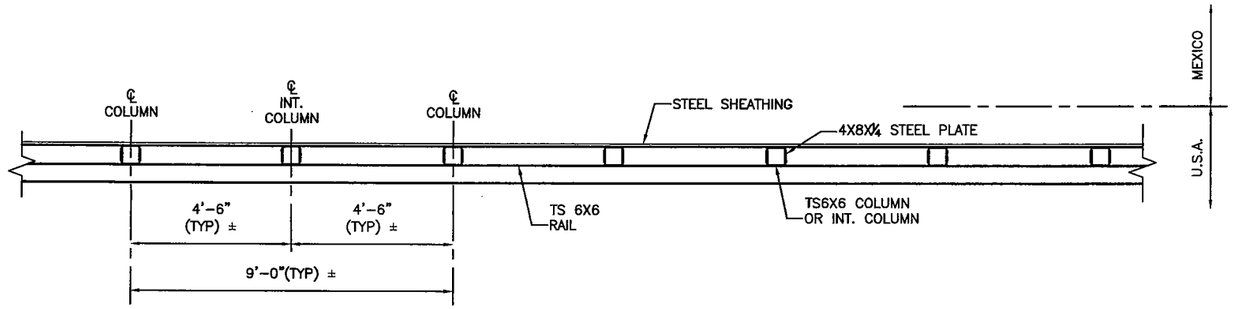

PLAN VIEW

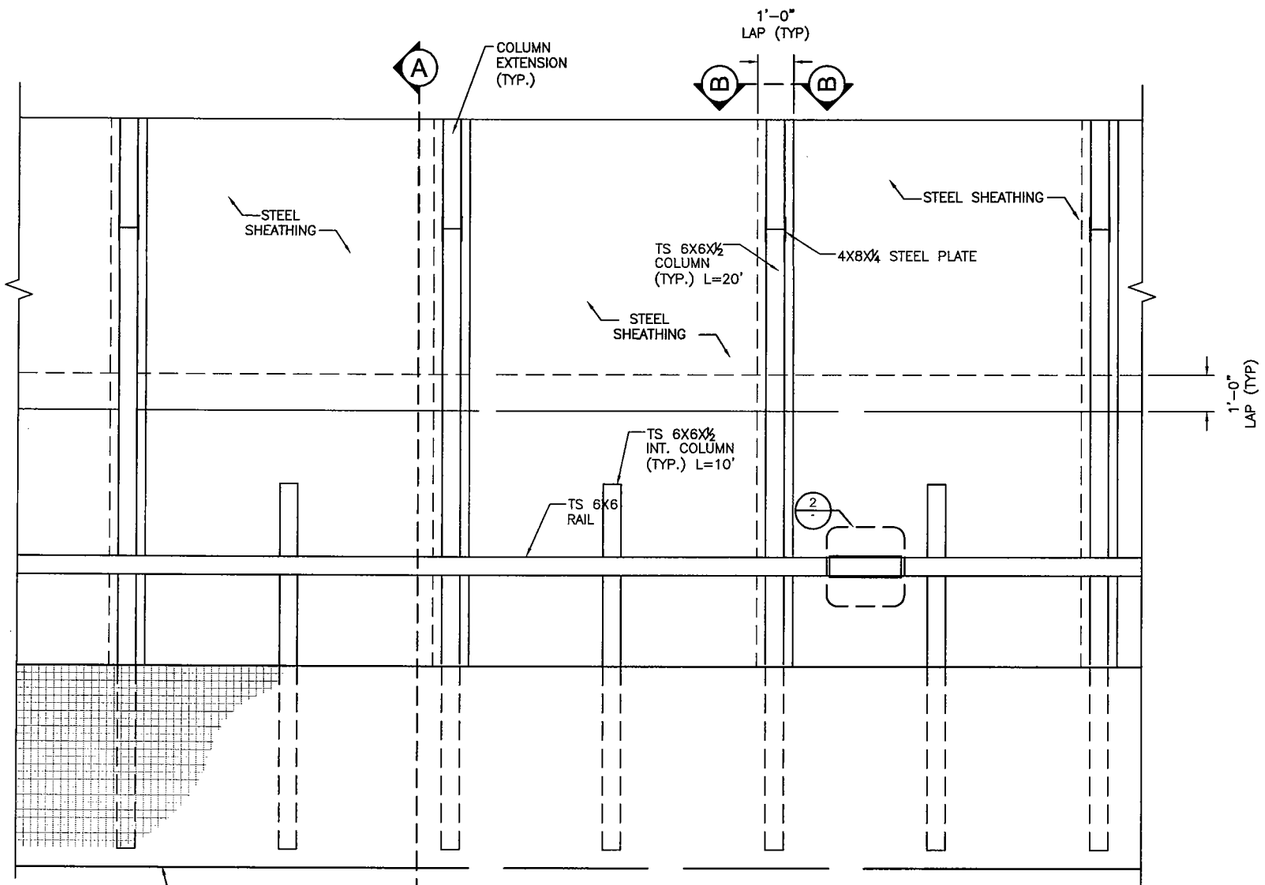

ELEVATION
(LOOKING NORTH)

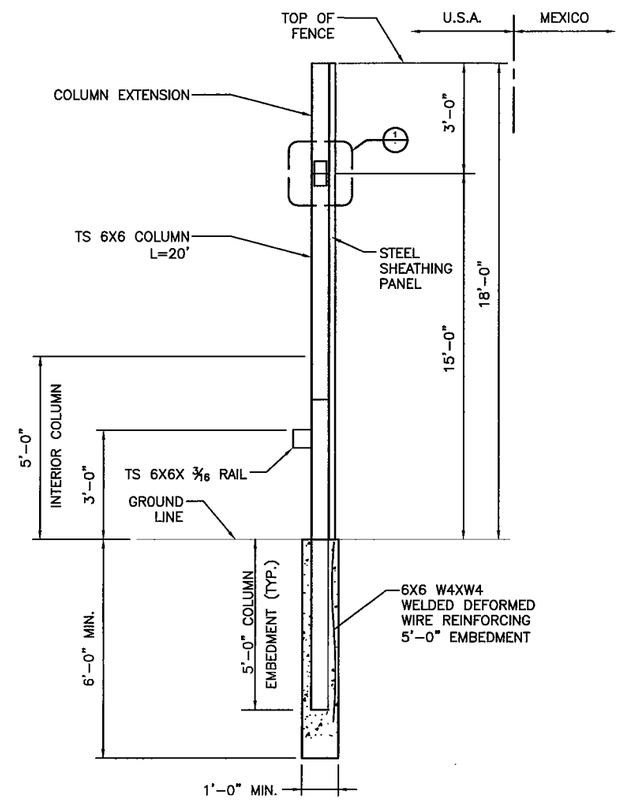

SECTION A-A

NOTE:
1. VALID FOR 90 MPH WIND

2. FOUNDATION DETAIL REQUIREMENTS SHOWN REPRESENT MINIMUM DIMENSIONS. FOUNDATION DESIGN REQUIRED BASED ON SITE SPECIFIC SOIL PROPERTIES.

US Army Corps of Engineers
Fort Worth District

Mark	Description	Date	Appr.

SCHEMATIC NOT FOR CONSTRUCTION

Baker
MICHAEL BAKER JR., INC
2929 NORTH CENTRAL AVENUE
SUITE 800
PHOENIX, AZ 85012

Designed by: KAS	Date:	Rev.	
Dwn by: MC	Ckd by: JWB	Submitted by: Michael Baker Jr., Inc.	
Reviewed by: TQ	Plot date: 11/18/07	Baker Project No: 112319	

PF225 CONCEPTUAL FENCE DESIGNS

PERSONNEL - VEHICLE TYPE 2B

SHEET REFERENCE NUMBER:
PV-2B

I:\projects\usace\pf225\drawings\acad 2006\pv-2b-1.dwg

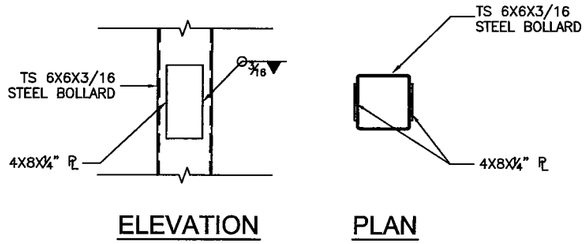

DETAIL 1
OPTIONAL SPLICE

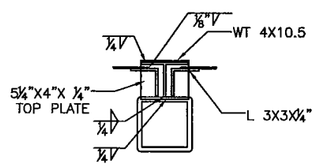

SECTION B-B

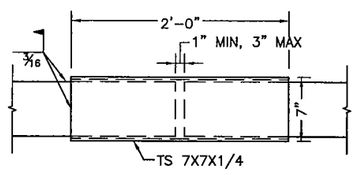

DETAIL 2
RAIL SPLICE (36' MAX SPACE)

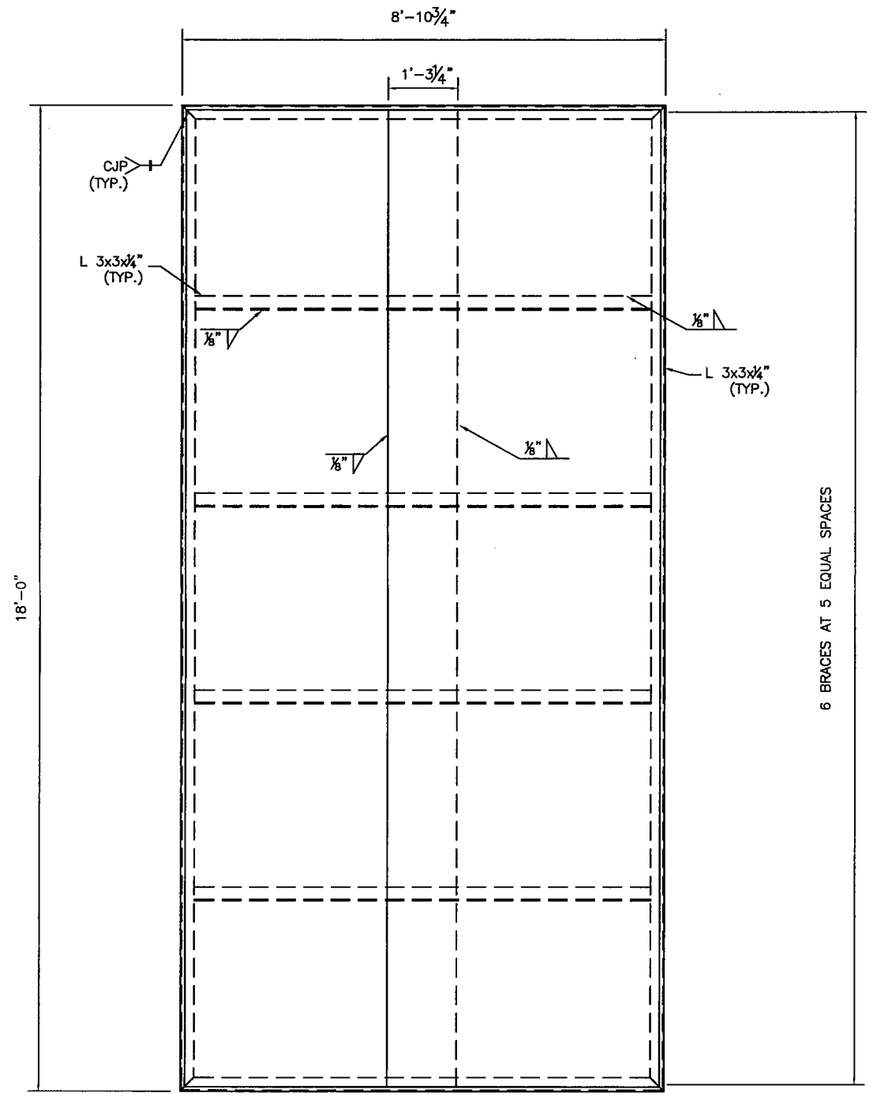

STANDARD STEEL SHEATHING PANEL

US Army Corps of Engineers
Fort Worth District

Mark	Description	Date	Appr.

SCHEMATIC
NOT FOR
CONSTRUCTION

Baker
MICHAEL BAKER JR., INC
2929 NORTH CENTRAL AVENUE
SUITE 800
PHOENIX, AZ 85012

Designed by: KAS	Date:	Rev.
Dwn by: KAS	Ckd by: JWB	Submitted by: Michael Baker Jr., Inc.
Reviewed by: TQ	Plot date: 11/18/07	Baker Project No: 112319

PF225 CONCEPTUAL FENCE DESIGNS

PERSONNEL - VEHICLE TYPE 2B

SHEET REFERENCE NUMBER
PV-2B

I:\projects\usace\pf225\drawing\acad 2006\pv-2b-1.dwg

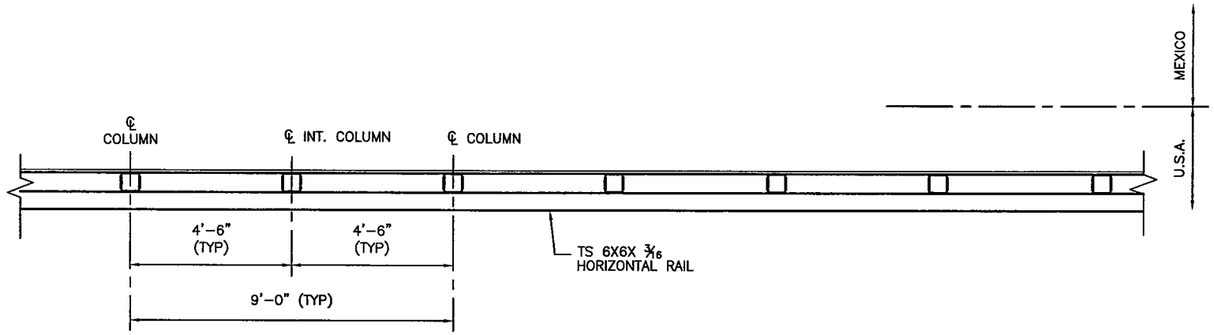

PLAN VIEW

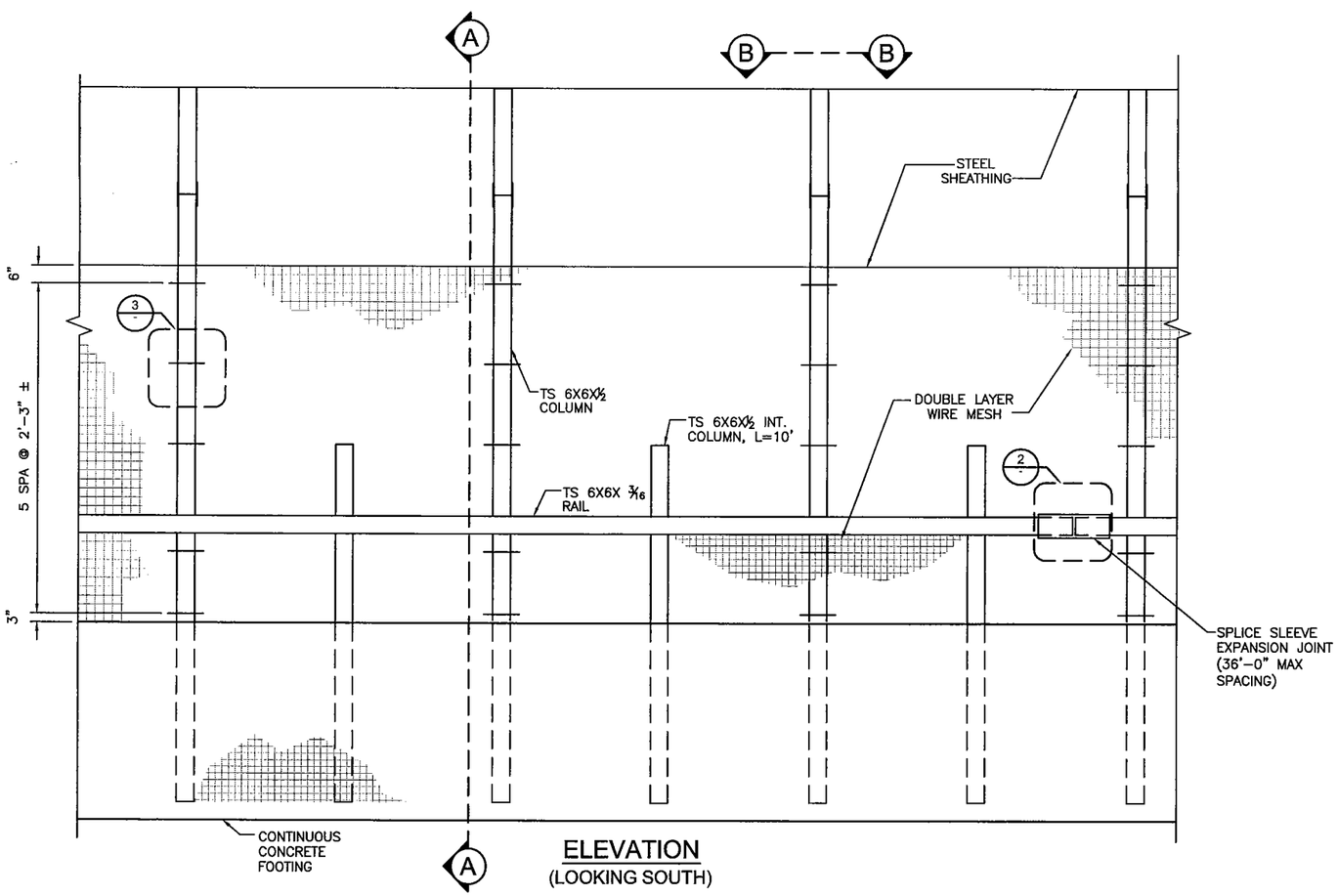

ELEVATION
(LOOKING SOUTH)

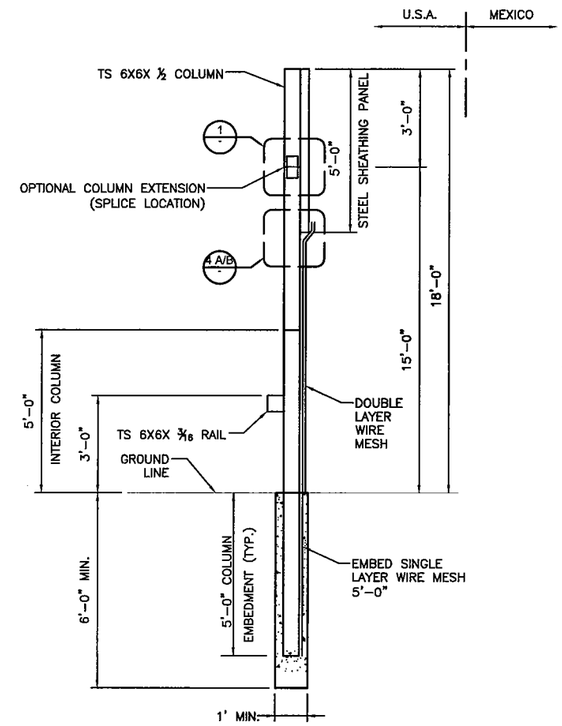

SECTION A-A

NOTE:
1. DESIGN VALID FOR 90 MPH WIND

2. FOUNDATION DETAIL REQUIREMENTS SHOWN REPRESENT MINIMUM DIMENSIONS AND MAY NEED INCREASED BASED ON FOUNDATION DESIGN.

US Army Corps of Engineers
Fort Worth District

Mark	Description	Date	Appr.

SCHEMATIC NOT FOR CONSTRUCTION

Baker
MICHAEL BAKER JR., INC
2929 NORTH CENTRAL AVENUE
SUITE 800
PHOENIX, AZ 85012

Designed by: RB
Dwn by: JN
Ckd by: TEQ
Reviewed by: DJL
Date:
Rev.
Submitted by: Michael Baker Jr., Inc.
Plot date: 11/18/07
Baker Project No: 112319

PF225 CONCEPTUAL FENCE DESIGNS

PERSONNEL - VEHICLE TYPE 2C

SHEET NUMBER
PV-2C

t:\projects\usace\pf225\drawings\acad 2006\pv-2c-1.dwg

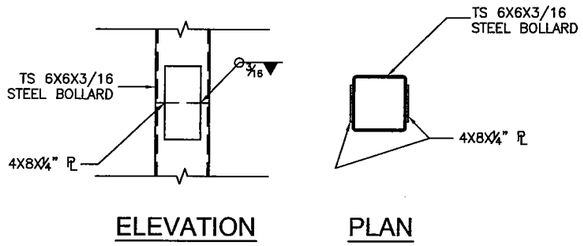

DETAIL1
OPTIONAL COLUMN SPLICE

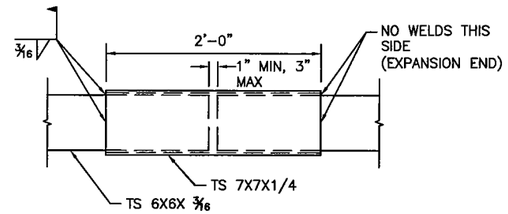

DETAIL 2
HORIZONTAL RAIL EXPANSION JOINT
36'-0" MAXIMUM SPACING

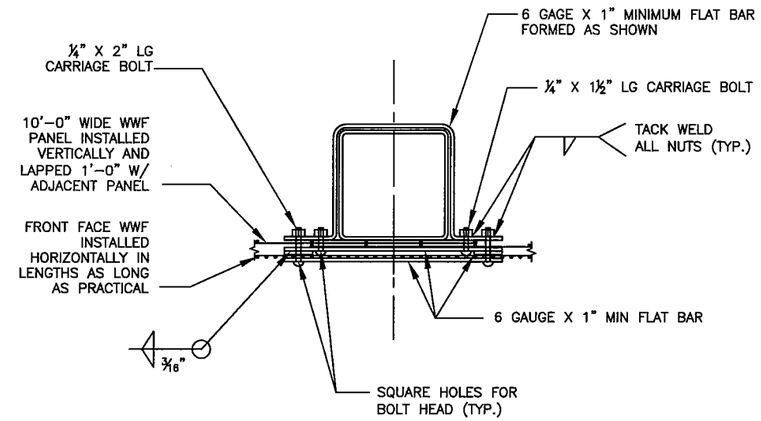

DETAIL3
POST BRACKET

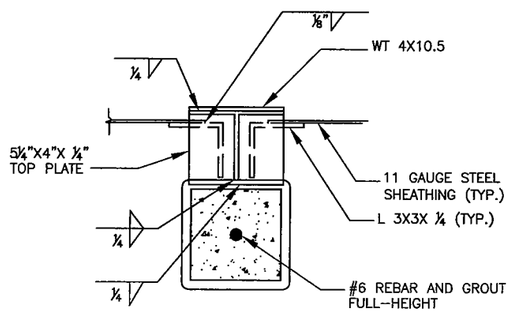

SECTION B-B

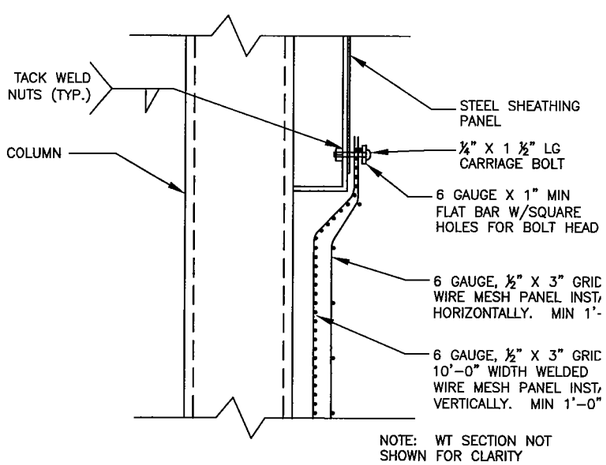

DETAIL 4 (A)
MESH - STEEL SHEATING PANEL
ATTACHMENT BETWEEN COLUMNS

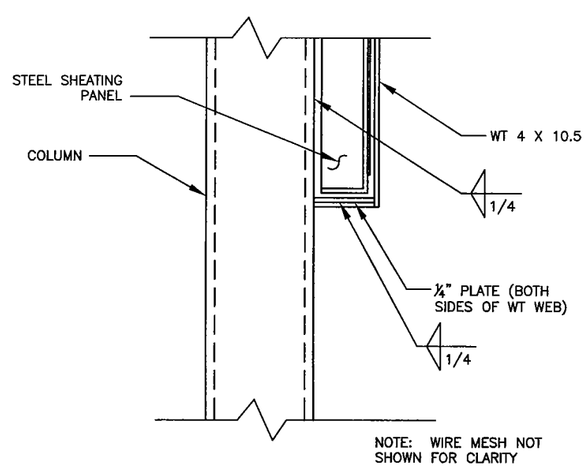

DETAIL 4 (B)
STEEL SHEATING PANEL SUPPORT
(AT COLUMNS)

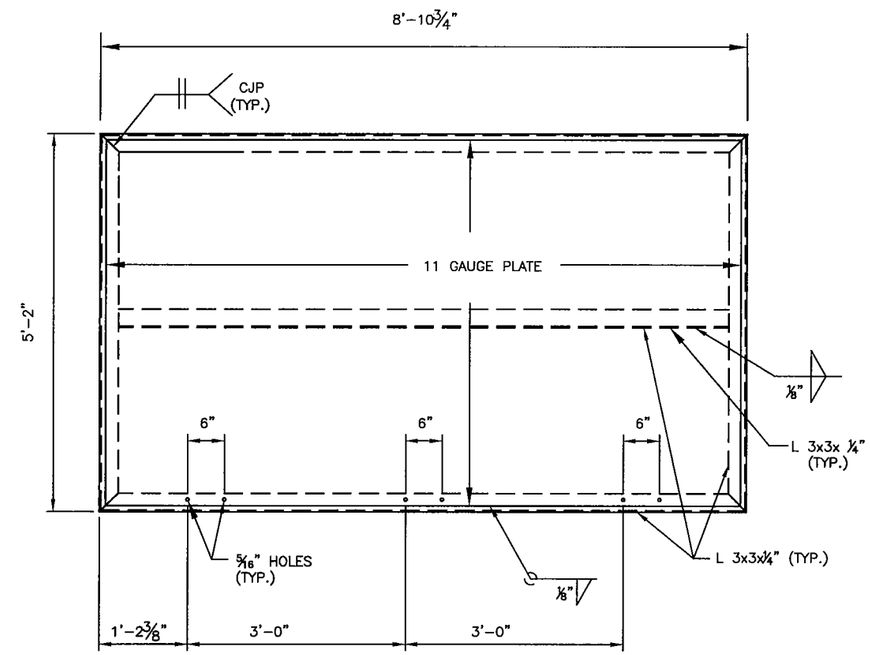

STEEL SHEATHING PANEL DETAIL

US Army Corps of Engineers
Fort Worth District

Mark	Description	Date	Appr.

SCHEMATIC
NOT FOR
CONSTRUCTION

Baker
MICHAEL BAKER JR., INC
2929 NORTH CENTRAL AVENUE
SUITE 900
PHOENIX, AZ 85012

Designed by: RB	Date:	Rev.
Dwn by: JN	Ckd by: TEQ	Submitted by: Michael Baker Jr., Inc.
Reviewed by: DJL		Plot date: 11/18/07
		Baker Project No: 1123 19

PF225
CONCEPTUAL
FENCE
DESIGNS

PERSONNEL -
VEHICLE
TYPE 2C

SHEET REFERENCE NUMBER
PV-2C

I:\projects\usace\pf225\drawings\acad 2008\pv-2c-1.dwg

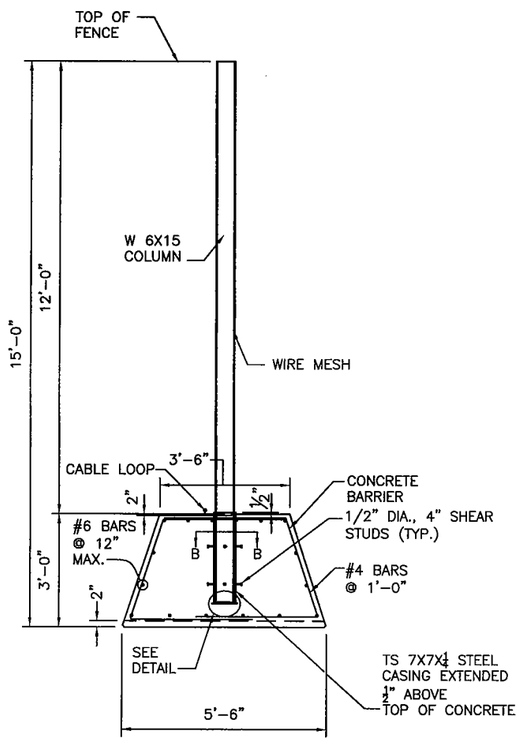

SECTION A-A

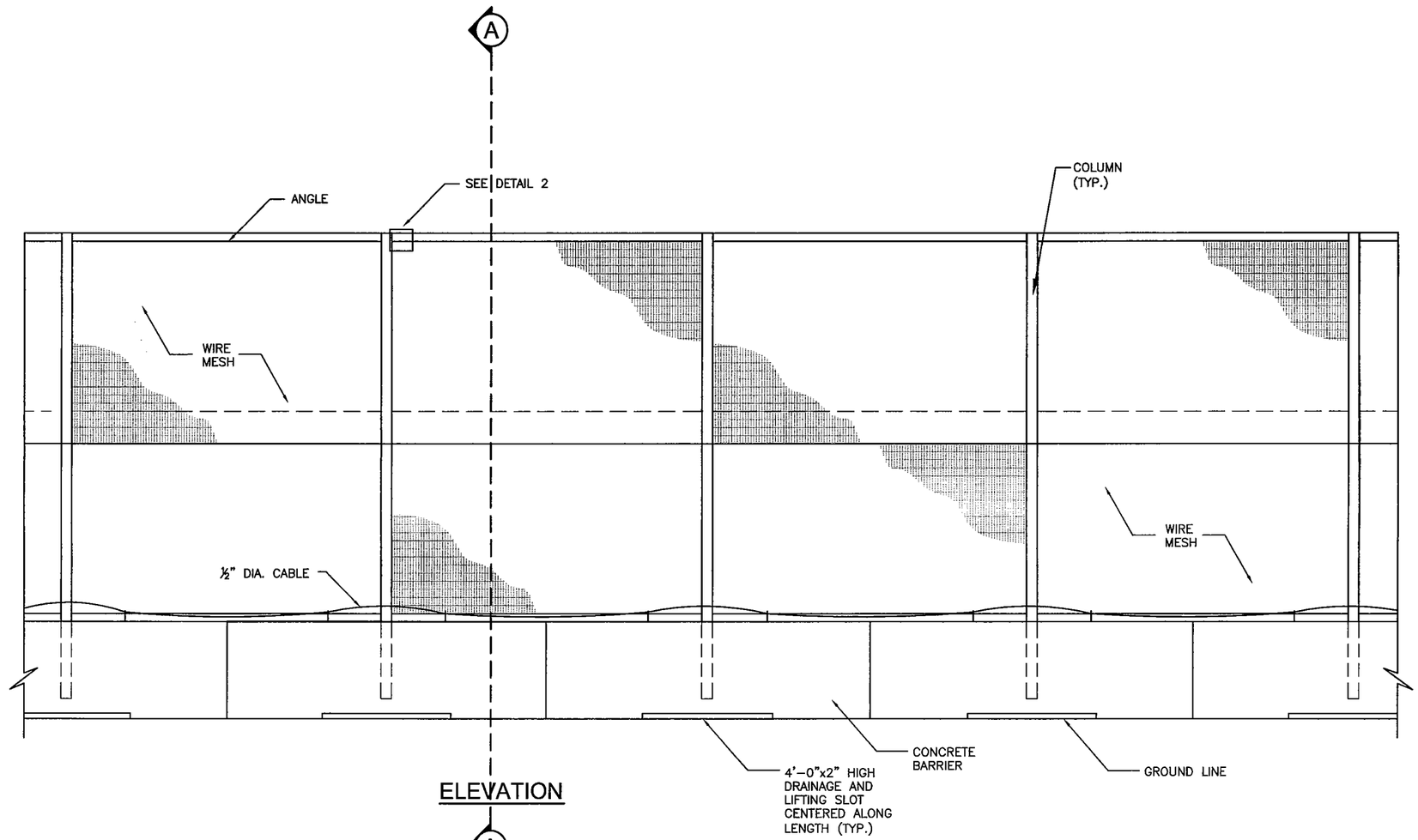

ELEVATION

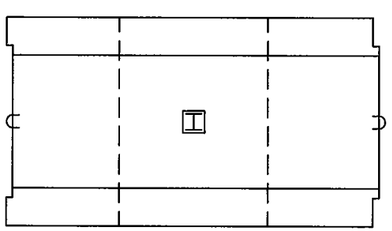

PLAN VIEW
10' CONCRETE SEGMENT

SECTION B-B

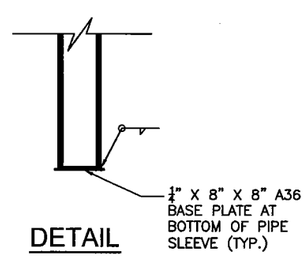

DETAIL

NOTE:
1. VALID FOR 90 MPH WIND

2. THIS FENCE CONSTRUCTION IS INTENDED TO BE DISMANTLED READILY. COORDINATE WITH BORDER CONTROL ON LOCATION AND NUMBER OF LOCK POINTS FOR ½" CABLE.

US Army Corps of Engineers
Fort Worth District

Mark	Description	Date	Appr.

SCHEMATIC NOT FOR CONSTRUCTION

Baker
MICHAEL BAKER JR., INC
2929 NORTH CENTRAL AVENUE
SUITE 800
PHOENIX, AZ 85012

Designed by: KAS	Dwn by: KAS/KNB	Ckd by: JWB	Reviewed by: TQ
Date:	Rev.	Submitted by: Michael Baker Jr., Inc.	Plot date: 11/18/07
Baker Project No: 112319			

PF225 CONCEPTUAL FENCE DESIGNS

PERSONNEL - VEHICLE TYPE 3A

SHEET REFERENCE NUMBER
PV-3A

i:\projects\usace\pf225\drawings\acad 2006\pv-3a-1.dwg

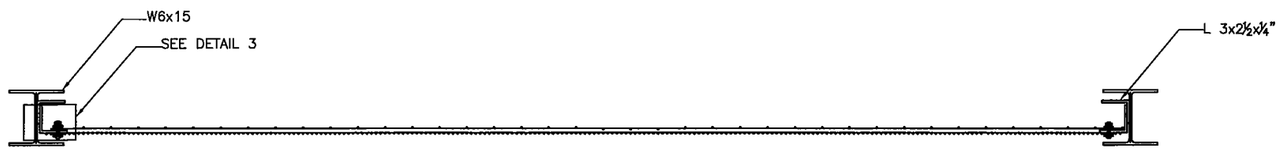

SECTION B-B

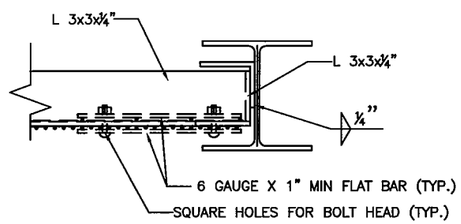

DETAIL 2
FENCE FABRIC ATTACHMENT

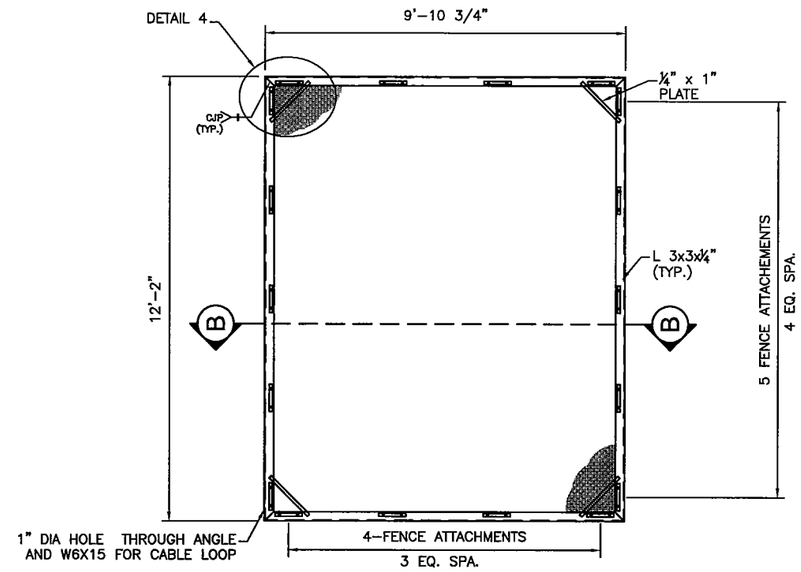

STANDARD FENCE PANEL

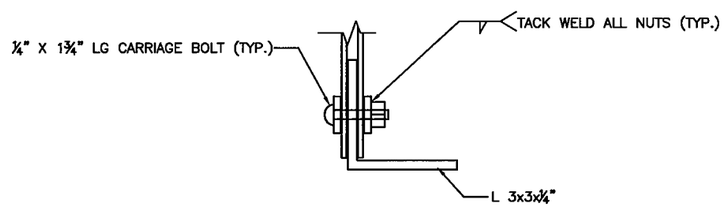

DETAIL 3

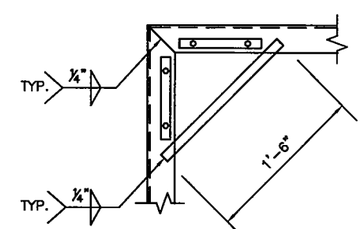

DETAIL 4

US Army Corps of Engineers
Fort Worth District

Mark	Description	Date	Appr.

SCHEMATIC NOT FOR CONSTRUCTION

Baker
MICHAEL BAKER JR., INC
2929 NORTH CENTRAL AVENUE
SUITE 1000
PHOENIX, AZ 85012

Designed by: RB	Date:	Rev.
Dwn by: JN	Ckd by: TEQ	Submitted by: Michael Baker Jr., Inc.
Reviewed by: DJL		Plot date: 11/16/07
		Baker Project No: 112319

PF225 CONCEPTUAL FENCE DESIGNS

PERSONNEL - VEHICLE TYPE 3A

SHEET REFERENCE NUMBER
PV-3A

I:\projects\usace\pf225\drawings\acad 2008\pv-3a-1.dwg

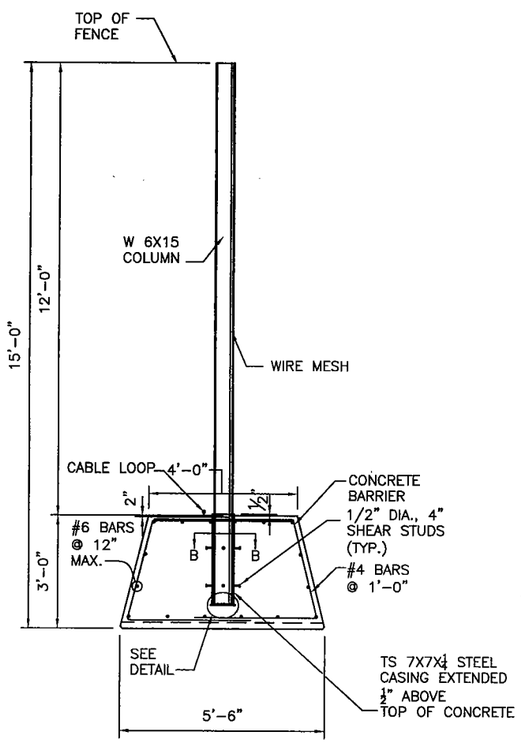

SECTION A-A

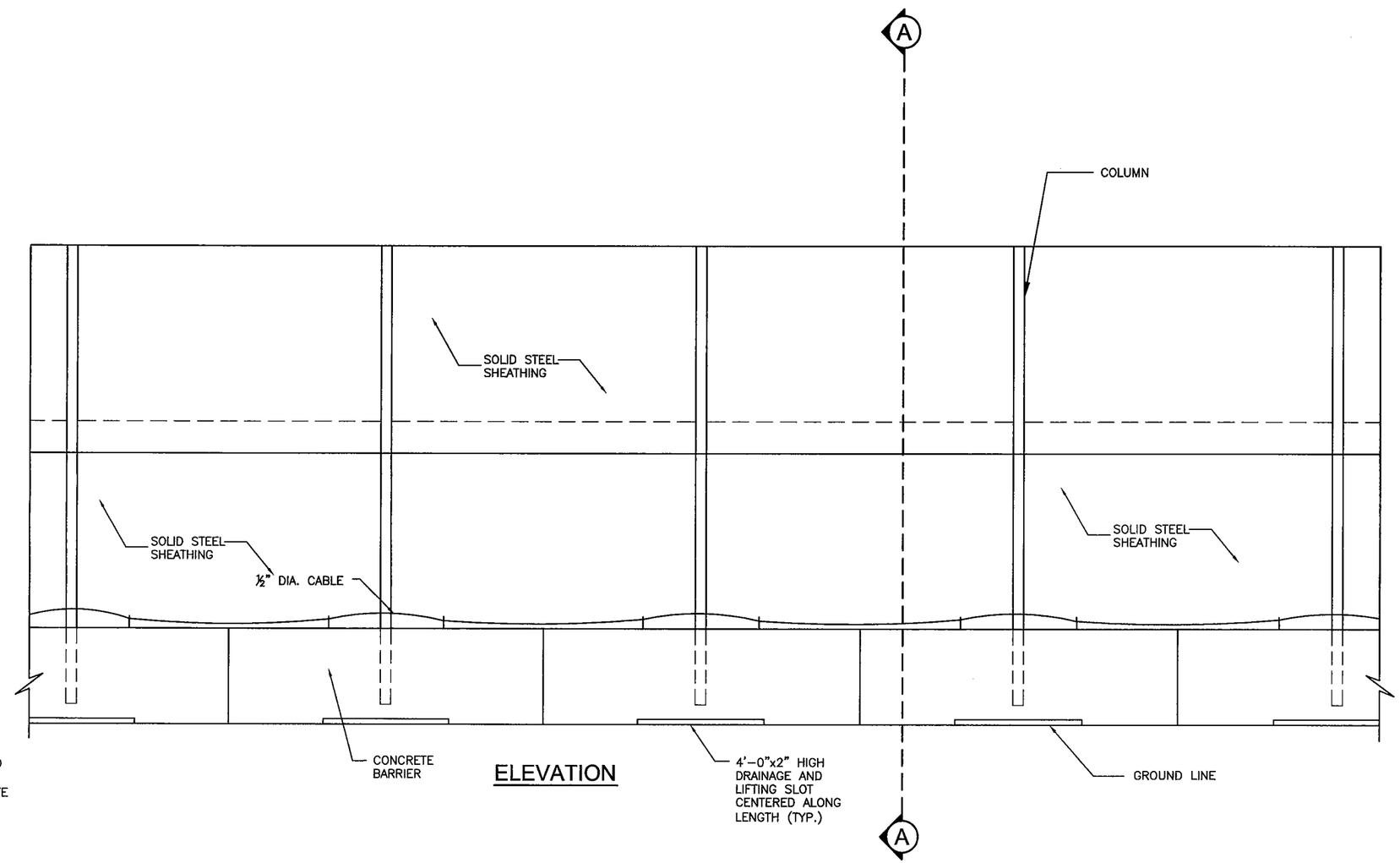

ELEVATION

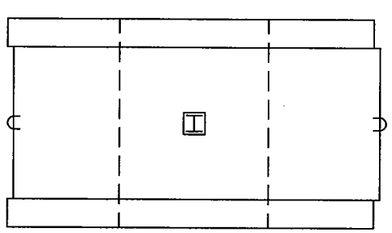

PLAN VIEW
10' CONCRETE SEGMENT

SECTION B-B

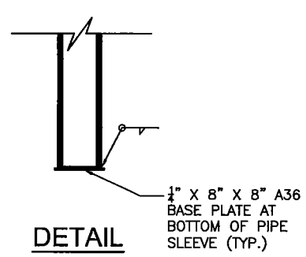

DETAIL

NOTE:
1. VALID FOR 90 MPH WIND

2. THIS FENCE CONSTRUCTION IS INTENDED TO BE DISMANTLED READILY. COORDINATE WITH BORDER CONTROL ON LOCATION AND NUMBER OF LOCK POINTS FOR 1/2" CABLE.

US Army Corps of Engineers
Fort Worth District

Mark	Description	Date	Appr.

SCHEMATIC NOT FOR CONSTRUCTION

Baker
MICHAEL BAKER JR., INC
2929 NORTH CENTRAL AVENUE SUITE 800
PHOENIX, AZ 85012

Designed by: KAS	Ckd by: JWB	Date:	Rev.
Dwn by: KAS/KNB		Submitted by: Michael Baker Jr., Inc.	
Reviewed by: TQ		Plot date: 11/18/07	Baker Project No: 112319

PF225 CONCEPTUAL FENCE DESIGNS

PERSONNEL - VEHICLE TYPE 3B

SHEET REFERENCE NUMBER
PV-3B

I:\projects\usace\pf225\drawings\acad 2006\pv-3b-1.dwg

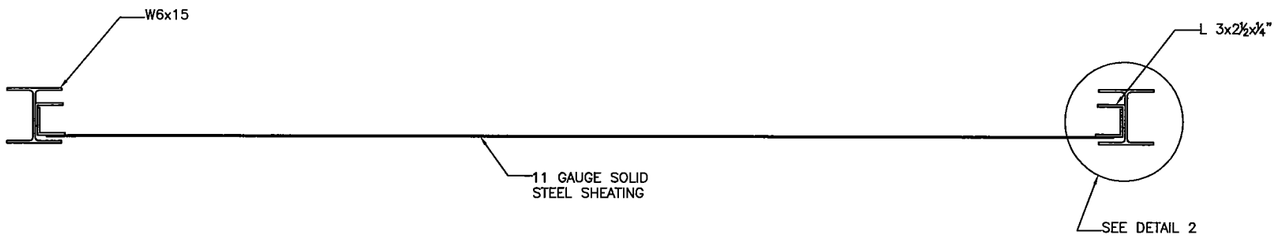

SECTION C-C

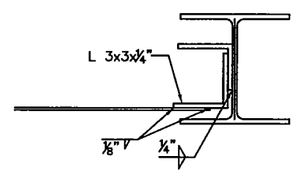

DETAIL 2

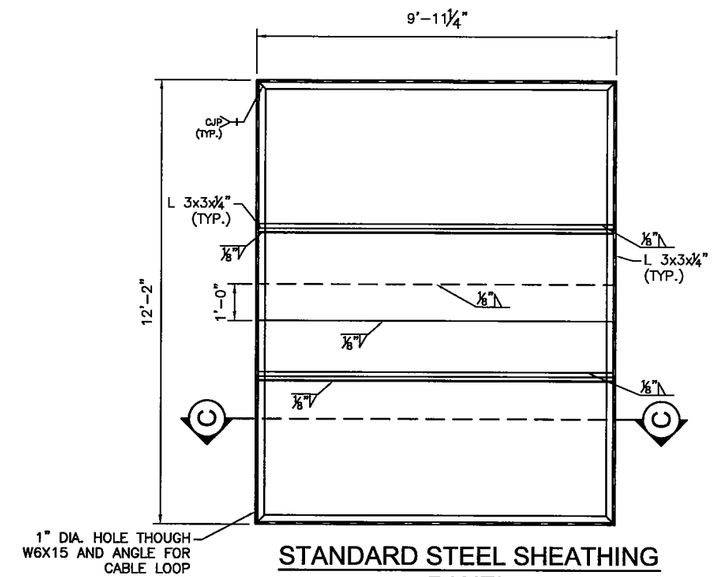

STANDARD STEEL SHEATHING PANEL

US Army Corps of Engineers
Fort Worth District

Mark	Description	Date	Appr.

SCHEMATIC NOT FOR CONSTRUCTION

Baker
MICHAEL BAKER JR., INC
2929 NORTH CENTRAL AVENUE
SUITE 1000
PHOENIX, AZ 85012

Designed by: RB	Date:	Rev.	
Dwn by: JN	Ckd by: TEQ	Submitted by: Michael Baker Jr., Inc.	
Reviewed by: DJL		Plot date: 11/16/07	Baker Project No: 112319

PF225 CONCEPTUAL FENCE DESIGNS

PERSONNEL - VEHICLE TYPE 3B

SHEET NUMBER:
PV-3B

I:\projects\usace\pf225\drawings\acad 2006\pv-3b-1.dwg

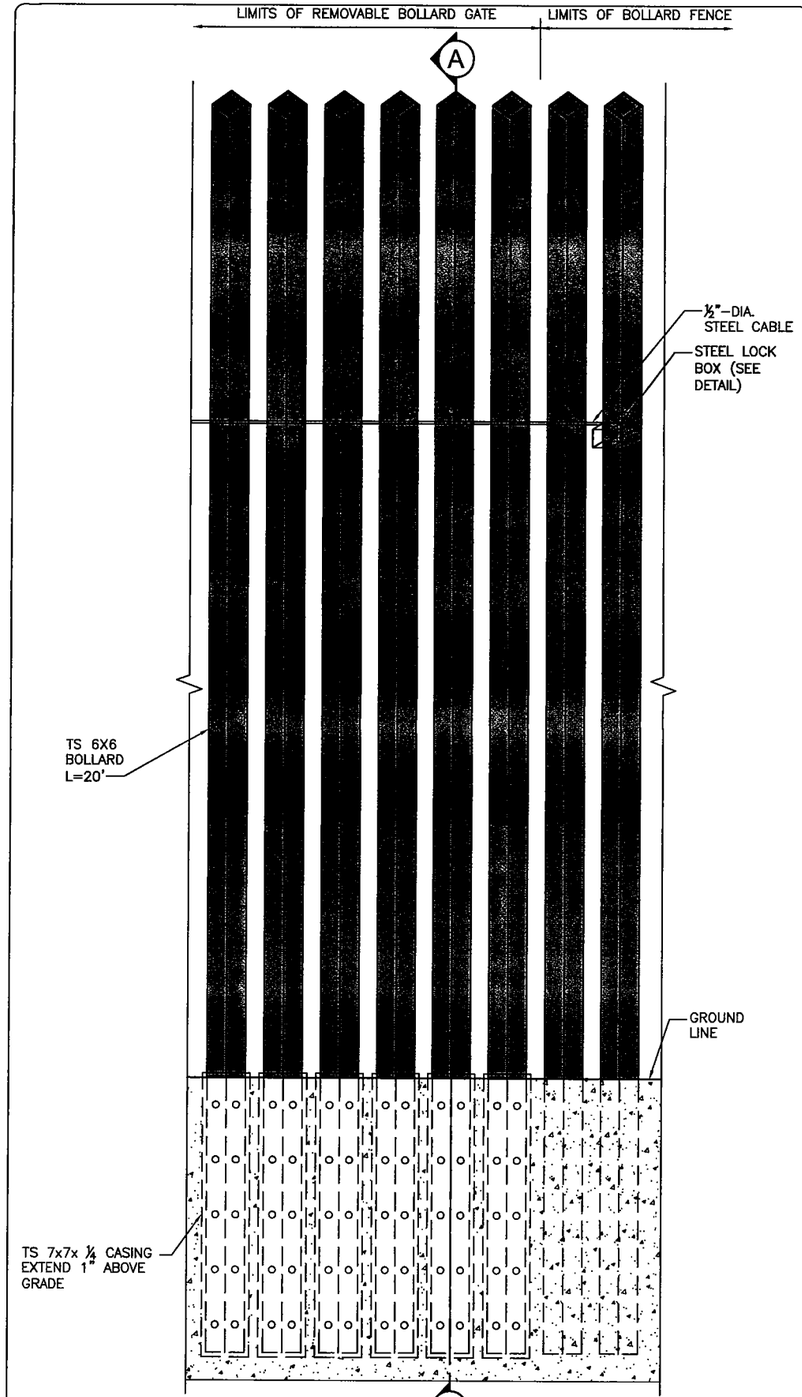

ELEVATION
(LOOKING SOUTH)

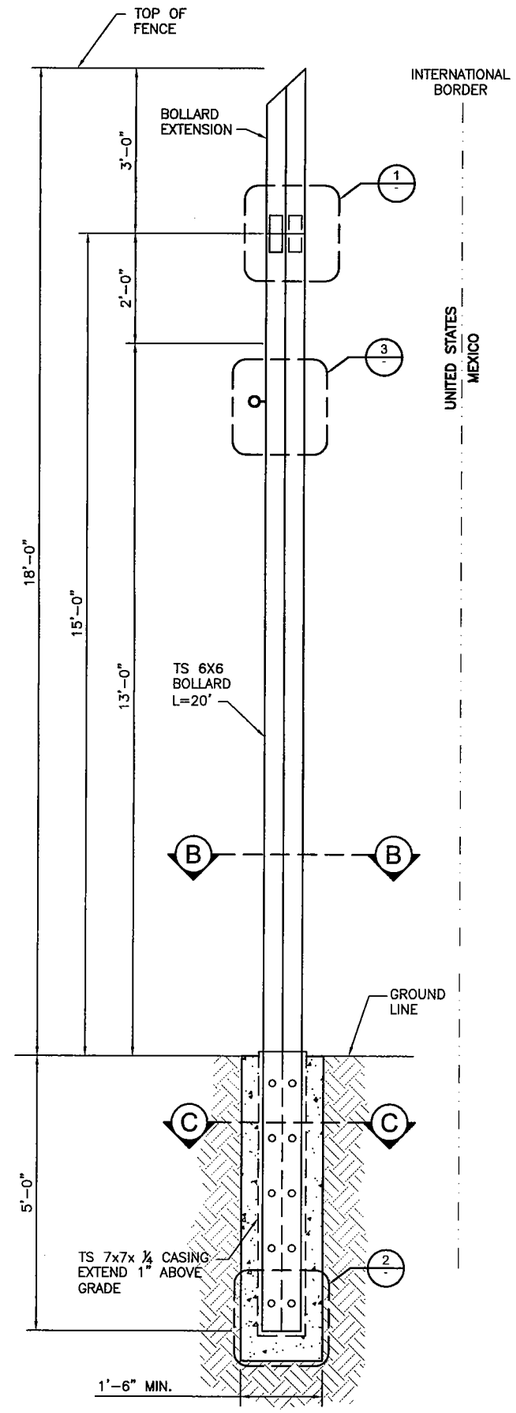

SECTION A-A

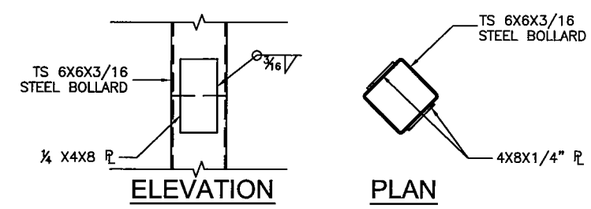

ELEVATION PLAN

DETAIL 1
OPTIONAL SPLICE

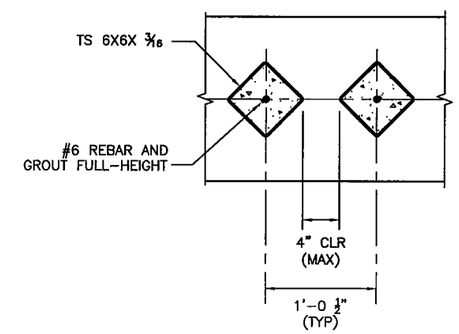

SECTION B-B

NOTES

1. FOUNDATION DETAILS SHOWN REPRESENT MINIMUM DIMENSIONAL REQUIREMENTS AND SHALL BE INCREASED IF NECESSARY BASED ON FINAL DESIGN.
2. VALID FOR 140 MPH WIND SPEED.
3. EYE BOLTS, LOCKBOX, AND CABLE ARE USED TO TIE BOLLARDS AND MUST BE LOCATED ON U.S. SIDE.
4. TYPICAL REMOVABLE LENGHT IS 20 FEET.

US Army Corps of Engineers
Fort Worth District

Mark	Description	Date	Appr.

SCHEMATIC NOT FOR CONSTRUCTION

Baker
MICHAEL BAKER JR., INC
2929 NORTH CENTRAL AVENUE, SUITE 1000
PHOENIX, AZ 85012

Designed by: KAS		Date:	Rev.
Dwn by: MKB	Ckd by: JWB	Submitted by: Michael Baker Jr., Inc.	
Reviewed by: TQ		Plot date: 11/18/07	Baker Project No: 112319

PF225 CONCEPTUAL FENCE DESIGNS

PERSONNEL - VEHICLE 20' - GATE

SHEET REFERENCE NUMBER
G-1

I:\projects\usace\pf225\drawings\acad 2006\gate - 20 ft - bollards.dwg

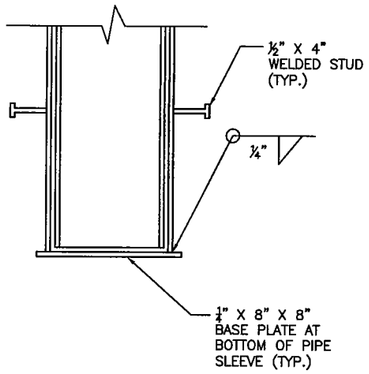

DETAIL 2

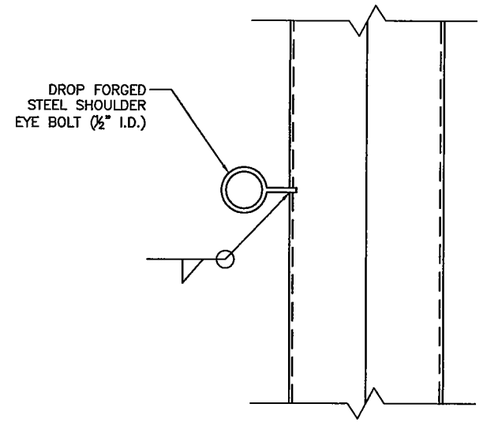

DETAIL 3

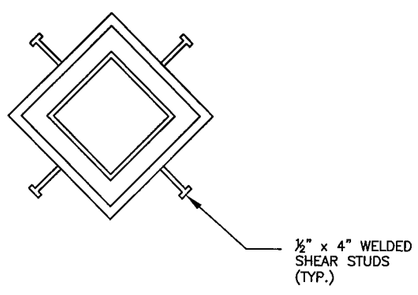

SECTION C-C

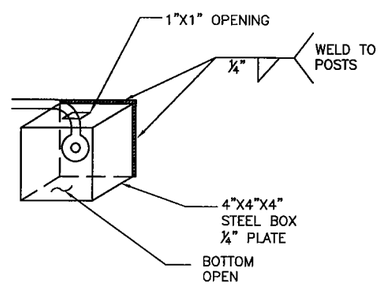

LOCK BOX DETAIL

US Army Corps
of Engineers
Fort Worth District

Mark	Description	Date	Appr.

SCHEMATIC
NOT FOR
CONSTRUCTION

Baker
MICHAEL BAKER JR., INC
2929 NORTH CENTRAL AVENUE
SUITE 500
PHOENIX, AZ 85012

Designed by: KAS		Date:	Rev.
Dwn by: MKB	Ckd by: JWB	Submitted by: Michael Baker Jr., Inc.	
Reviewed by: TQ		Plot date: 11/18/07	Baker Project No: 112319

PF225 CONCEPTUAL FENCE DESIGNS

PERSONNEL -
VEHICLE
20' - GATE

SHEET REFERENCE NUMBER:
G-1

I:\projects\usace\pf225\drawings\acad 2006\gate - 20 ft - bollards.dwg

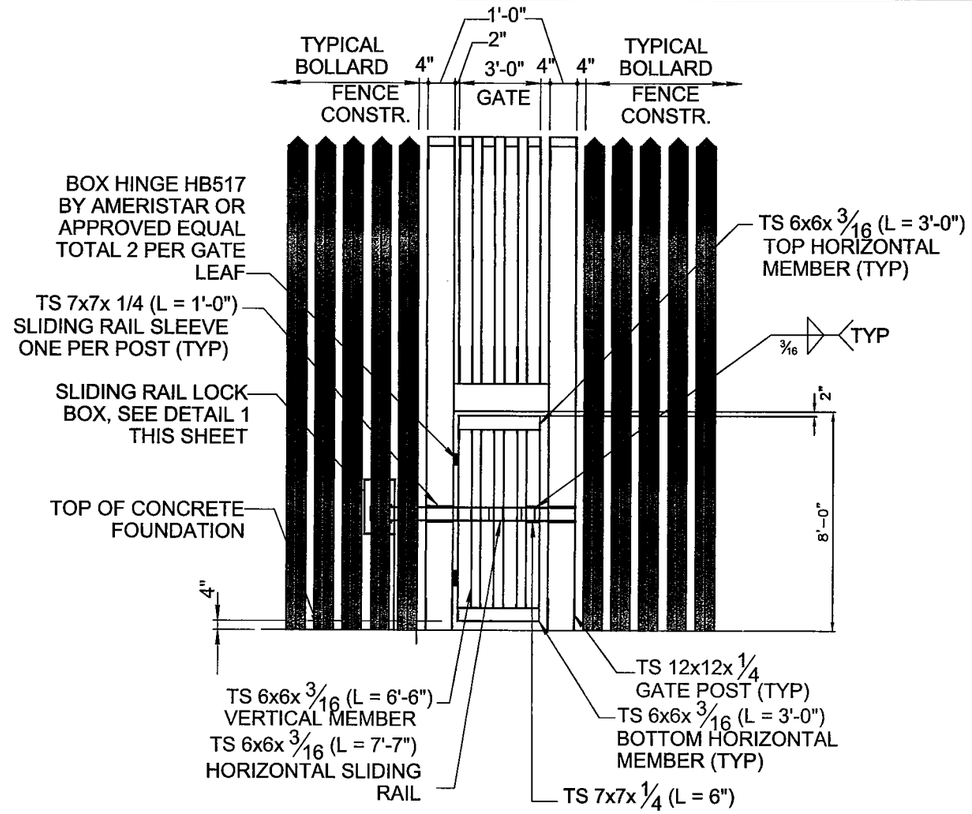

TYPICAL ELEVATION - BOLLARD FENCE GATE

SCALE: ~3/16" = 1'-0"

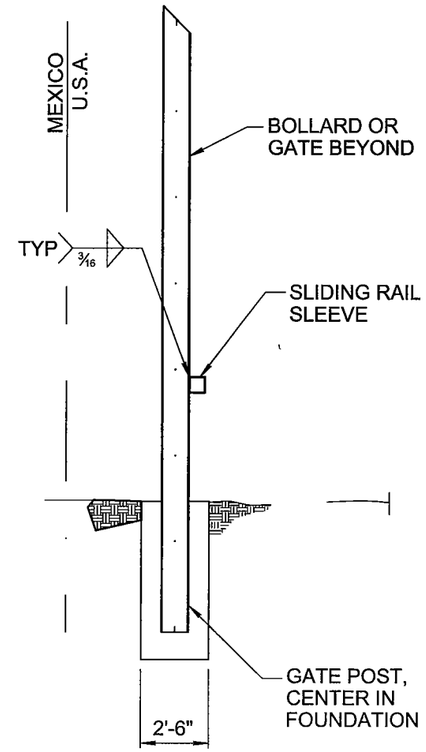

TYPICAL SECTION AT POST

SCALE: ~3/16" = 1'-0"

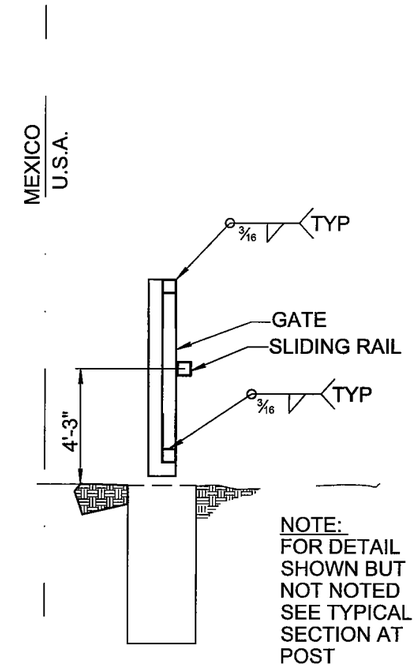

TYPICAL SECTION AT LEAF

SCALE: ~3/16" = 1'-0"

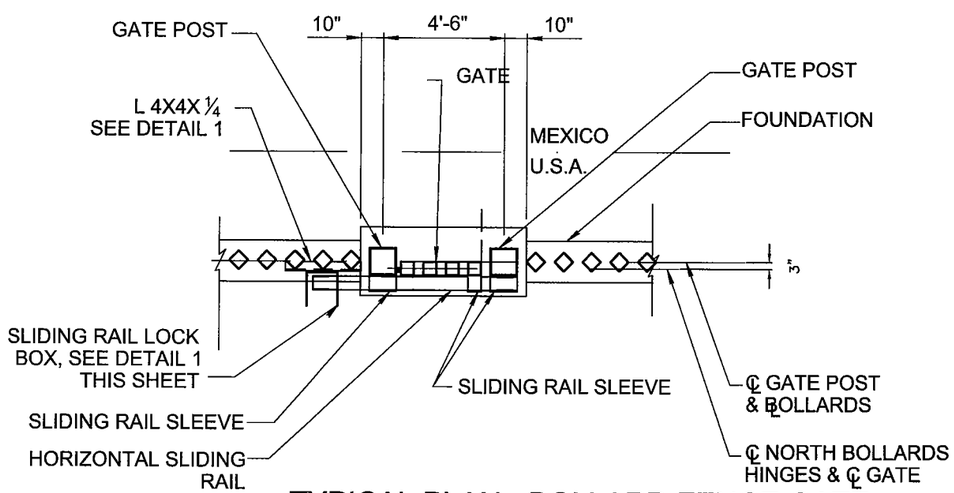

TYPICAL PLAN - BOLLARD FENCE GATE

SCALE: ~3/16" = 1'-0"

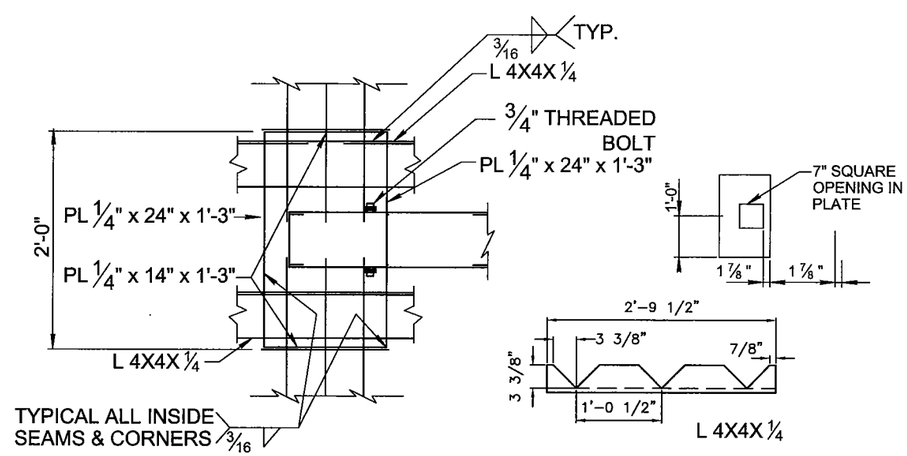

DETAIL 1 - LOCK BOX

NO SCALE:

US Army Corps of Engineers
Fort Worth District

Mark	Description	Date	Appr.

SCHEMATIC NOT FOR CONSTRUCTION

Baker
MICHAEL BAKER JR., INC
2325 NORTH CENTRAL AVENUE
SUITE 100
PHOENIX, AZ 85012

Designed by: KAS		Date:	Rev.
Dwn by: MKB	Ckd by: JWB	Submitted by: Michael Baker Jr., Inc.	
Reviewed by: TQ		Plot date: 11/18/07	Baker Project No: 112319

PF225 CONCEPTUAL FENCE DESIGNS

PERSONNEL GATE DETAIL

SHEET REFERENCE NUMBER: G-2

I:\projects\usace\pf225\drawings\acad 2006\swing gate2.dwg